Gummi · Metall · Technik

AIRCRAFT COMPONENTS

Our product range

WE DEVELOP
YOU MAKE IT FLY

TABLE OF CONTENTS

GMT 3

TIE RODS 16 - 171

Airbus Standard (ABS) 16 - 135

- ABS2180 16 - 31
- ABS1263 32 - 68
- ABS1214 69 - 94
- ABS1188 95 - 114
- ABS1187 115 - 135

EN Rods 136 - 157

- EN4693 136 - 143
- EN4694 144 - 150
- EN4695 151 - 157

Special parts 158 - 171

- S19 Full Titanium Rod 159
- Fairing Failsafe Strut 160
- Rotating Rod 161
- Drive Strut 162
- Carbon Fibre Floor Beam Strut 163
- Self Locking Strut 164
- A320 Y-Tie Rod 165
- Carbon Fibre Rod 166
- Fixed Stainless Steel Rod 167
- Adjustable Stainless Steel Rod 168
- Fixed Aluminium Rod 169
- Folding Strut 170
- Door Rod 171

RUBBER METAL PARTS 172 - 200

Airbus Standard (ABS) 172 - 189

- ABS2147 Shock Mount (with notch) 174
- ABS2147 Shock Mount 175
- ABS2146 Shock Mount (color coding) 176
- ABS1212 Shock Mount 177
- ABS1186 Shock Mount 178
- ABS1067 Shock Mount 179 - 181
- ABS0757 182 - 183
- ABS0756 184 - 189

Special parts 190 - 200

- Isolator Mount 191
- Bushing 192 - 194
- Clawstop 195
- Engine Mount 196
- Window Bracket 197
- MF Element 198
- Shock Mount (rectangular) 199
- Mounting of internal measurement unit (Eurofighter) 200

CONTACT 201

PDF-CATALOGUE

qr.gmt-aerospace.com/products/pdf-catalogue

FLIP-CATALOGUE

qr.gmt-aerospace.com/products/flip-catalogue

WE DEVELOP
YOU MAKE IT FLY

Welcome to GMT GmbH and thank you for your interest in our company and products!

GMT is a well-known family-run company with almost 50 years of experience in the field of vibration, shock and noise control and employs more than 800 experts in design, development and production globally. With headquarters located in Bühl, Germany and numerous branches all over the world, GMT has an internationally acknowledged reputation for excellence across industrial sectors.

GMT's aircraft division is one of the newest facilities ensuring GMT is capable of complying with the very latest technical requirements and quality standards demanded by the Aerospace industry — GMT has proven to be a reliable partner of the aviation industry for more than 20 years. Focusing on the development and production of shock-absorbing rubber-metal parts as well as structure stabilizing elements, GMT's dedicated team of experienced developers meet the challenges and requirements of our customers on a daily basis.

Aircrafts incorporating GMT shock-absorbing products enjoy optimized levels of refinement and comfort. Not all aircrafts are fitted with GMT products, so there are certainly differences that you can hear and feel during flight.

Over recent years we developed several new components that have set the benchmark for aviation standards amongst respected airplane manufacturers. You will find many of these components in our catalogue of course.

We hope you will enjoy our new catalogue and look forward to supporting your requirements.

GMT®
Gummi · Metall · Technik

TIE RODS

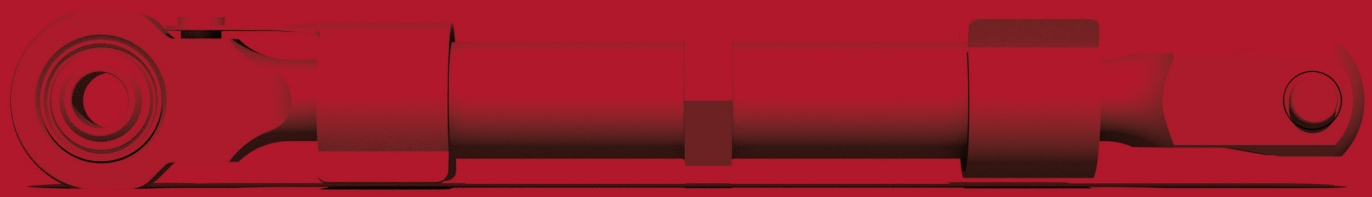

PRODUCT EXAMPLES OF TIE RODS ACC. TO ABS2180

Detailed technical information of all tie rods acc. to ABS2180

Link to technical information:
qr.gmt-aerospace.com/products/abs2180

ABS2180 (GMT-no. 650376..)

ABS2180 (GMT-no. 650380..)

ABS2180 (GMT-no. 650427..)

PRODUCT EXAMPLES OF TIE RODS ACC. TO ABS1263

Detailed technical information of all tie rods acc. to ABS1263

Link to technical information:
qr.gmt-aerospace.com/products/abs1263

ABS1263 (GMT-no. 650016..)

ABS1263 (GMT-no. 650102..)

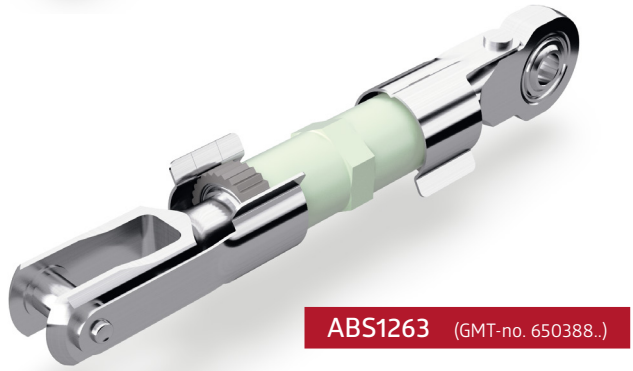

ABS1263 (GMT-no. 650388..)

PRODUCT EXAMPLES OF TIE RODS ACC. TO ABS1214

Detailed technical information of all tie rods acc. to ABS1214

Link to technical information:
qr.gmt-aerospace.com/products/abs1214

ABS1214 (GMT-no. 650047..)

ABS1214 (GMT-no. 650392..)

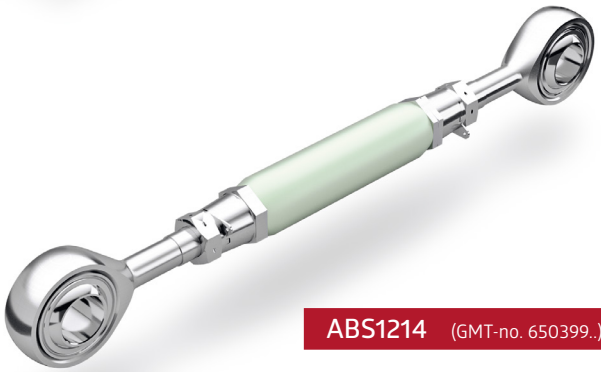

ABS1214 (GMT-no. 650399..)

PRODUCT EXAMPLES OF TIE RODS ACC. TO ABS1188

Detailed technical information of all tie rods acc. to ABS1188

Link to technical information:
qr.gmt-aerospace.com/products/abs1188

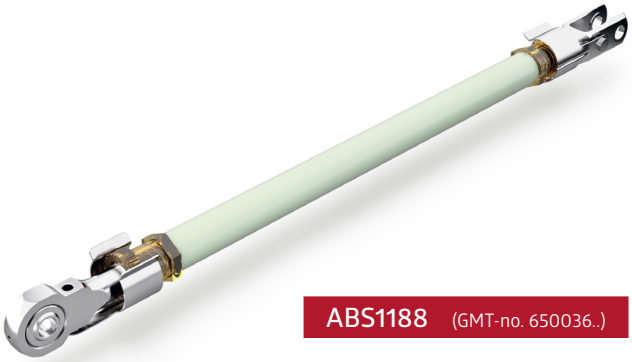

ABS1188 (GMT-no. 650036..)

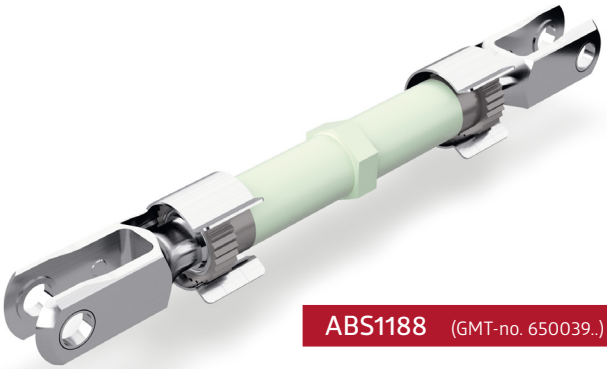

ABS1188 (GMT-no. 650039..)

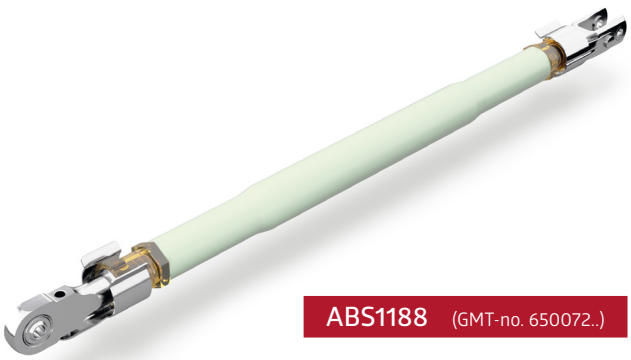

ABS1188 (GMT-no. 650072..)

PRODUCT EXAMPLES OF TIE RODS ACC. TO ABS1187

Detailed technical information of all tie rods acc. to ABS 1187

Link to technical information:
qr.gmt-aerospace.com/products/abs1187

ABS1187 (GMT-no. 650074..)

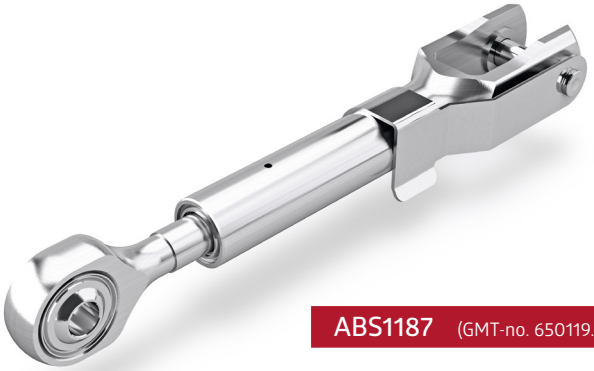

ABS1187 (GMT-no. 650119..)

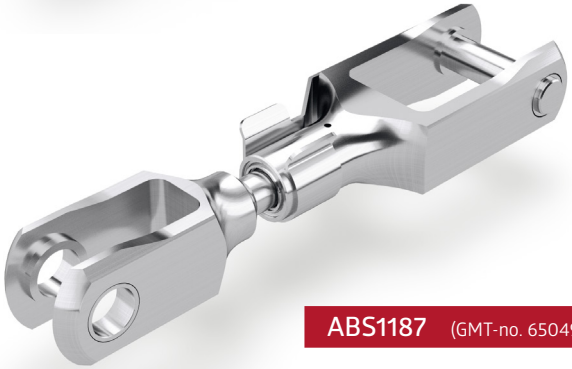

ABS1187 (GMT-no. 650498..)

PRODUCT EXAMPLES OF TIE RODS ACC. TO EN

Detailed technical information of all tie rods acc. to EN

Link to technical information:
qr.gmt-aerospace.com/products/enrods

EN4693 (GMT-no. EN4693..)

EN4694 (GMT-no. EN4694..)

EN4695 (GMT-no. EN4695..)

PRODUCT OVERVIEW TIE RODS SPECIAL PARTS

S19 Full Titanium Rod (GMT-no. 650299..)

Link to technical information:
qr.gmt-aerospace.com/products/s19-full-titanium-rod/650299

Fairing Failsafe Strut (GMT-no. 650405..)

Link to technical information:
qr.gmt-aerospace.com/products/fairing-failsafe-strut/650405

Rotating Rod (GMT-no. 65029801)

Link to technical information:
qr.gmt-aerospace.com/products/rotating-rod/65029801

Drive Strut (GMT-no. 65035903)

Link to technical information:
qr.gmt-aerospace.com/products/drive-strut/65035903

Carbon Fibre Floor Beam Strut (GMT-no. 65051601)

Link to technical information:
qr.gmt-aerospace.com/products/carbon-fibre-floor-beam-strut/65051601

Self Locking Strut (GMT-no. 65030501)

Link to technical information:
qr.gmt-aerospace.com/products/self-locking-strut/65030501

PRODUCT OVERVIEW TIE RODS SPECIAL PARTS

A320 Y-Tie Rod (GMT-no. 65064001)

Link to technical information:
qr.gmt-aerospace.com/products/a320-y-tie-rod/65064001

Carbon Fibre Rod (GMT-no. 650092..)

Link to technical information:
qr.gmt-aerospace.com/products/carbon-fibre-rod/650092

Fixed Stainless Steel Rod (GMT-no. 65032301)

Link to technical information:
qr.gmt-aerospace.com/products/fixed-stainless-steel-rod/65032301

Adjustable Stainless Steel Rod (GMT-no. 65032201)

Link to technical information:
qr.gmt-aerospace.com/products/adjustable-stainless-steel-rod/65032201

Folding Strut (GMT-no. 65016001)

Link to technical information:
qr.gmt-aerospace.com/products/folding-strut/65016001

Door Rod (GMT-no. 650192..)

Link to technical information:
qr.gmt-aerospace.com/products/door-rod/650192

RUBBER METAL PARTS

PRODUCT OVERVIEW RUBBER METAL PARTS ACC. TO ABS

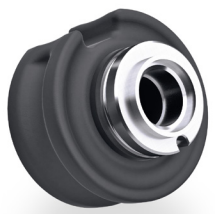

ABS2147 Shock Mount (with notch) (GMT-no. 42016501)

Link to technical information:
qr.gmt-aerospace.com/products/abs2147-shock-mount-with-notch/42016501

ABS2147 Shock Mount (GMT-no. 42017501)

Link to technical information:
qr.gmt-aerospace.com/products/abs2147-shock-mount/42017501

ABS2146 Shock Mount (color coding) (GMT-no. 960555..)

Link to technical information:
qr.gmt-aerospace.com/products/abs2146-shock-mount-color-coding/960555

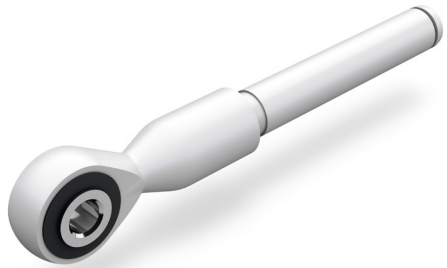

ABS1212 Shock Mount (GMT-no. 65003401)

Link to technical information:
qr.gmt-aerospace.com/products/abs1212-shock-mount/65003401

ABS1186 Shock Mount (GMT-no. 592057..)

Link to technical information:
qr.gmt-aerospace.com/products/abs1186-shock-mount/592057

ABS1067 Shock Mount (GMT-no. 420072.., 420073.., 420074..)

Link to technical information:
qr.gmt-aerospace.com/products/abs1067-shock-mount

PRODUCT OVERVIEW OF RUBBER METAL PARTS ACC. TO ABS0757

Detailed technical information of
rubber metal parts acc. to ABS0757

Link to technical information:
qr.gmt-aerospace.com/products/abs0757

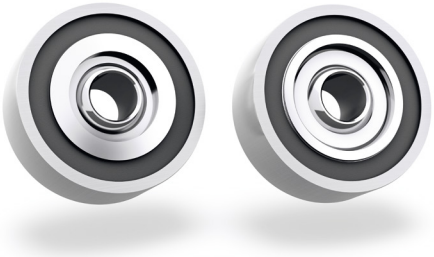

ABS0757 (GMT-no. 42009501)

ABS0757 (GMT-no. 42009801)

PRODUCT EXAMPLES OF RUBBER METAL PARTS ACC. TO ABS0756

Detailed technical information of all
rubber metal parts acc. to ABS0756

Link to technical information:
qr.gmt-aerospace.com/products/abs0756

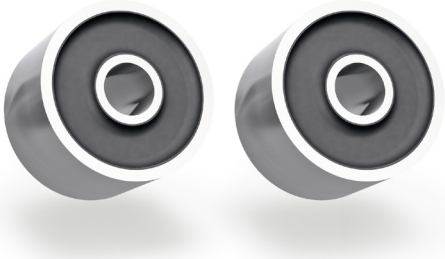

ABS0756 (GMT-no. 42009103)

ABS0756 (GMT-no. 42011101)

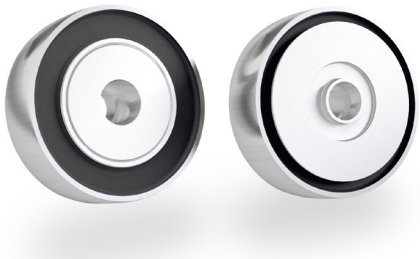

ABS0756 (GMT-no. 41031301)

PRODUCT OVERVIEW RUBBER METAL SPECIAL PARTS

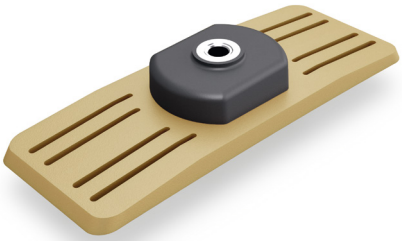

Isolator Mount (GMT-no. 69000901)

Link to technical information:
qr.gmt-aerospace.com/products/isolator-mount/69000901

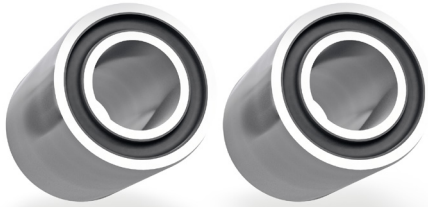

Bushing (GMT-no. 42009401)

Link to technical information:
qr.gmt-aerospace.com/products/bushing/42009401

Bushing (GMT-no. 42009601)

Link to technical information:
qr.gmt-aerospace.com/products/bushing/42009601

Bushing (GMT-no. 42010202)

Link to technical information:
qr.gmt-aerospace.com/products/bushing/42010202

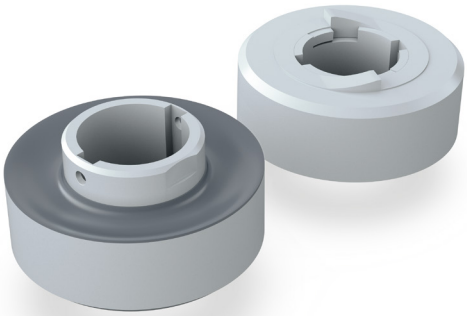

Clawstop (GMT-no. 41047401)

Link to technical information:
qr.gmt-aerospace.com/products/clawstop/41047401

Engine Mount (GMT-no. 12003601)

Link to technical information:
qr.gmt-aerospace.com/products/engine-mount/12003601

PRODUCT OVERVIEW RUBBER METAL PARTS

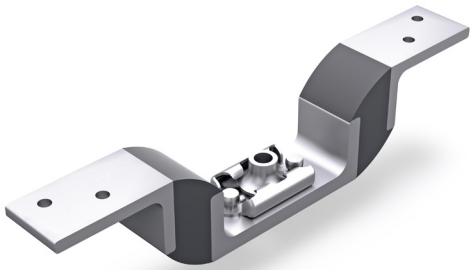

Window Bracket (GMT-no. 86000304)

Link to technical information:
qr.gmt-aerospace.com/products/window-bracket/86000304

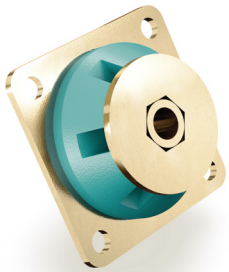

MF Element (GMT-no. 15501801)

Link to technical information:
qr.gmt-aerospace.com/products/mf-element/15501801

Shock Mount (rectangular) (GMT-no. 94003001, 94003101)

Link to technical information:
qr.gmt-aerospace.com/products/shock-mount-rectangular/94003

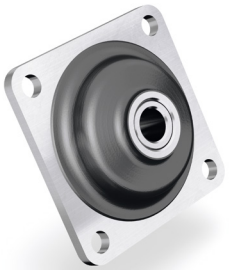

Mounting of internal measurement unit (Eurofighter) (GMT-no. 62026201)

Link to technical information:
qr.gmt-aerospace.com/products/mounting-of-internal-measurement-unit-eurofighter/62026201

AIRBUS STANDARD

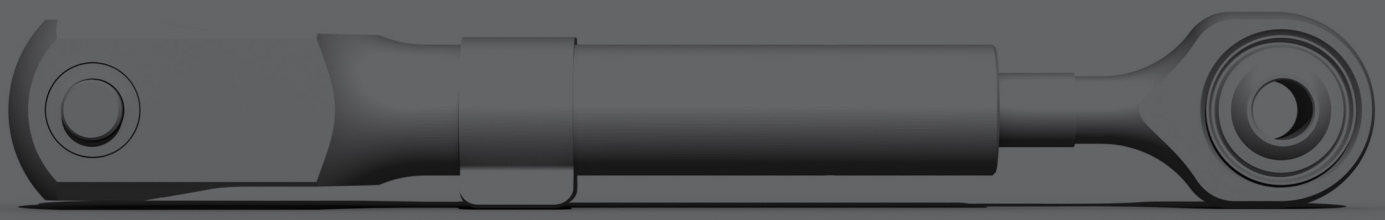

TABLE OF CONTENTS

→ ABS2180 16 - 31
→ ABS1263 32 - 68
→ ABS1214 69 - 94
→ ABS1188 95 - 114
→ ABS1187 115 - 135

DESCRIPTION TO CFRP TIE RODS ABS2180

Mainly applicable for interior fittings and mounting of units in fuselage and cabin, also usable as structure part. Is used where components with long rod bodies and light weight are requested.

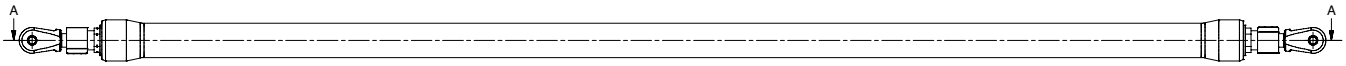

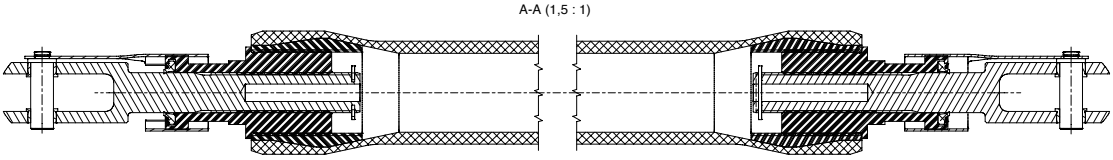

Advantage:

1. Simple and fast mounting by means of patented locking element.
2. Length adjustment in mounted condition is also possible with closed locking element.
3. Bolt for load transmission is integrated in the locking element (only for ABS1263).
4. Optional block available for locking element avoids that the longitudinal adjusted components are shifted unintended.
5. Integrated securing against hollowing avoids too far unscrew of the thread while mounting.
6. Threaded plastic inserts avoids problems with corrosion inside the thread.
7. Threaded plastic inserts assures thermic insulation between fuselage and cabin.
8. Threaded plastic inserts assures acoustic insulation between fuselage and cabin.
9. Integrated sealing in the threaded inserts avoids the penetration of the inner thread with fluids.
10. Fork end with titan bushings for flexible design by modification of the titan bushings with equal fork geometry.
11. Fork end with titan bushings avoids problems with corrosion for contact with carbon fibre or aluminium parts.
12. Light weight due to CFK Rod body.

Designation

Description block	Identity block				
Tie rod	ABS2180	A3	0732	M	G

Number of this standard
Assembly code:
Size code:
Fatigue Load category:
Clip code:

COMPONENTS OF TIE RODS ABS2180

Components and their function

Rod end

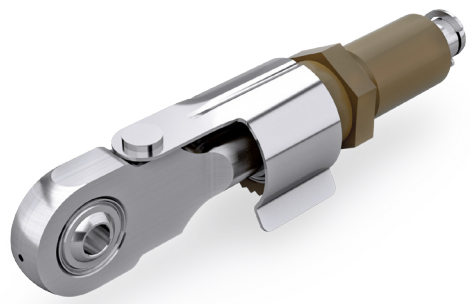

Fork end

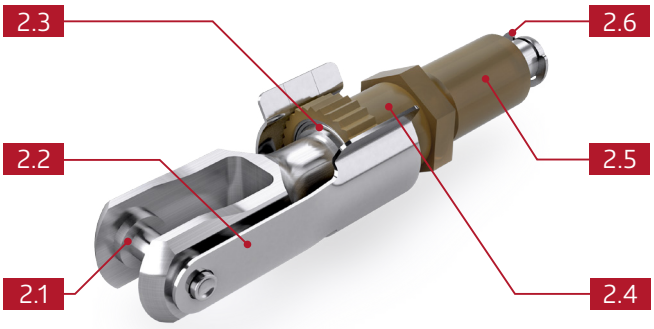

2.1

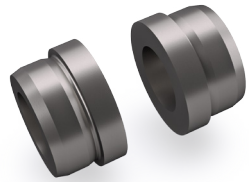

Titanium bushes

- Aids better load transmission.
- Higher surface pressure possible.
- Through change of geometry
- (boring/width) modular structure with same geometry of fork possible.

2.2

Locking clip (Clip code G)

Quick-locking mechanism for assembly by hand. Serves as anti-twist plate and aids in transmission of loads.

OR

2.2

closed

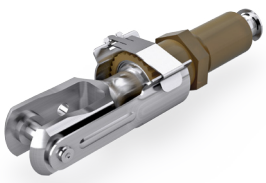

open

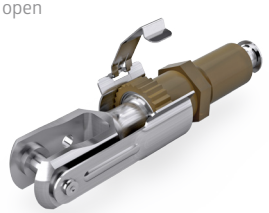

Locking clip with retaining clamp (Clip code H)

The locking clip with retaining clamp serves for locking of rotation and consequently prevents from unintentional variation of length of the Tie Rod after the final assembly.

2.3

Rubber ring

Prevents penetration of water and dust into rod assembly.

2.4

Spring

Links threads of threaded sleeve and fork end against each other and prevents any thread play.

2.5

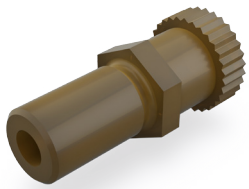

Plastic insert

Aids in transmission of loads. Plastic prevents corrosion in thread and acts as an insulator.

2.6

Safety ring

Prevents and controls too far turning off the thread.

TIE RODS ACC. TO ABS2180 GMT-NO. 650376..

Traceparts

View A

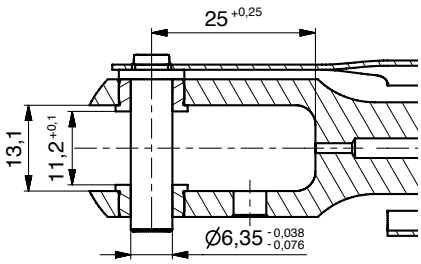

View B

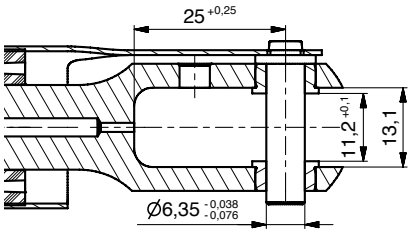

* adjustable range [mm]

ABS-no.	GMT-no.	Ultimate tension load [kN]	Ultimate compression load [kN]	Weight [g]	Rod body outer Ø [mm]	Length L [mm]	Material Rod body	Material Ends
ABS2180 A3 0500 LG	65037601	18	4,5	229	19	500	CFRP	AL
ABS2180 A3 0600 LG	65037604	18	4,5	240	19	600	CFRP	AL

TIE RODS ACC. TO ABS2180 GMT-NO. 650377..

Traceparts

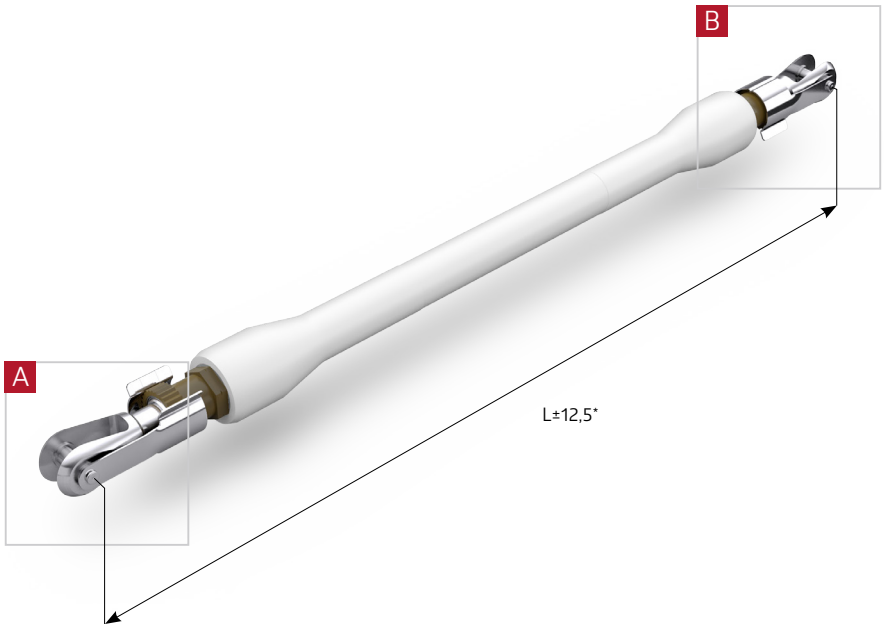

View A

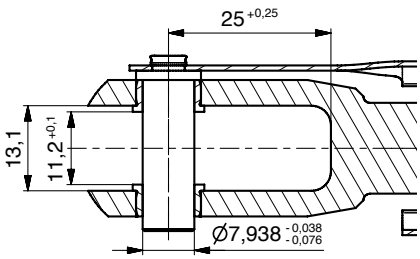

View B

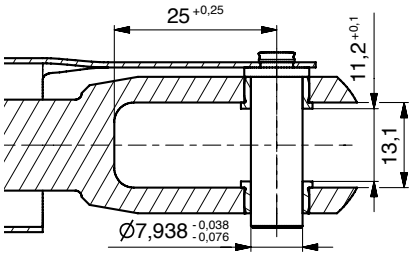

* adjustable range [mm]

ABS-no.	GMT-no.	Ultimate tension load [kN]	Ultimate compression load [kN]	Weight [g]	Rod body outer Ø [mm]	Length L [mm]	Material Rod body	Material Ends
ABS2180 B3 0500 MG	65037702	30	6	303	23,3	500	CFRP	AL
ABS2180 B3 0732 MG	65037701	30	6	339	23,3	732	CFRP	AL
ABS2180 B3 0780 MG	65037703	30	6	346	23,3	780	CFRP	AL

TIE RODS ACC. TO ABS2180 GMT-NO. 650378..

Traceparts

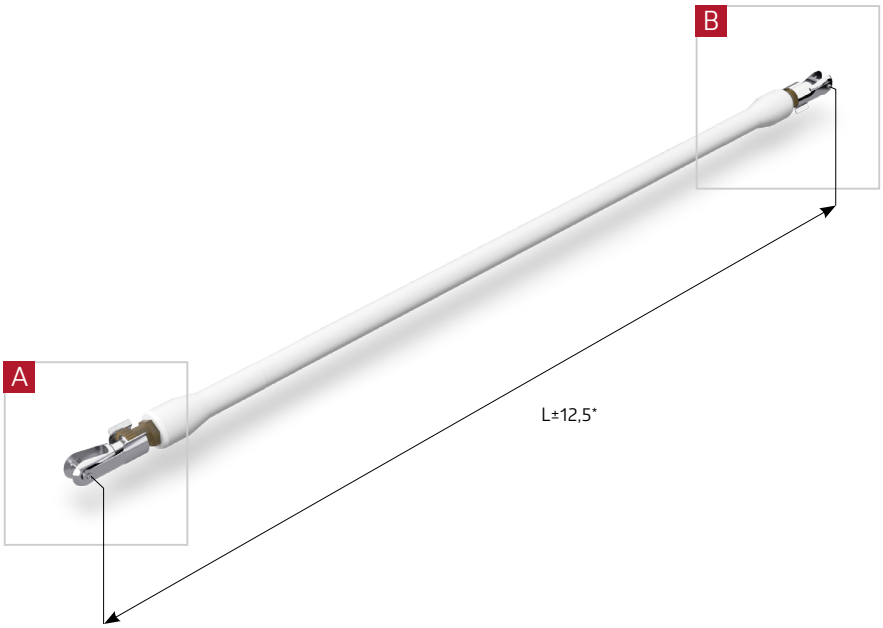

View A

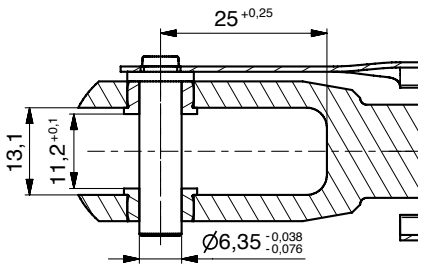

View B

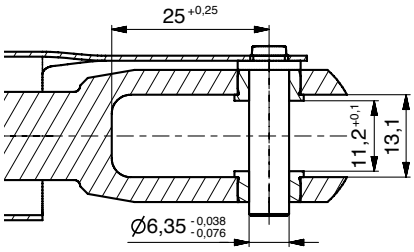

* adjustable range [mm]

ABS-no.	GMT-no.	Ultimate tension load [kN]	Ultimate compression load [kN]	Weight [g]	Rod body outer Ø [mm]	Length L [mm]	Material Rod body	Material Ends
ABS2180 B4 1000 HG	65037804	18	3,5	418	24,3	1000	CFRP	AL
ABS2180 B4 1233 HG	65037803	18	3,5	468	24,3	1233	CFRP	AL

TIE RODS ACC. TO ABS2180 GMT-NO. 650379..

Traceparts

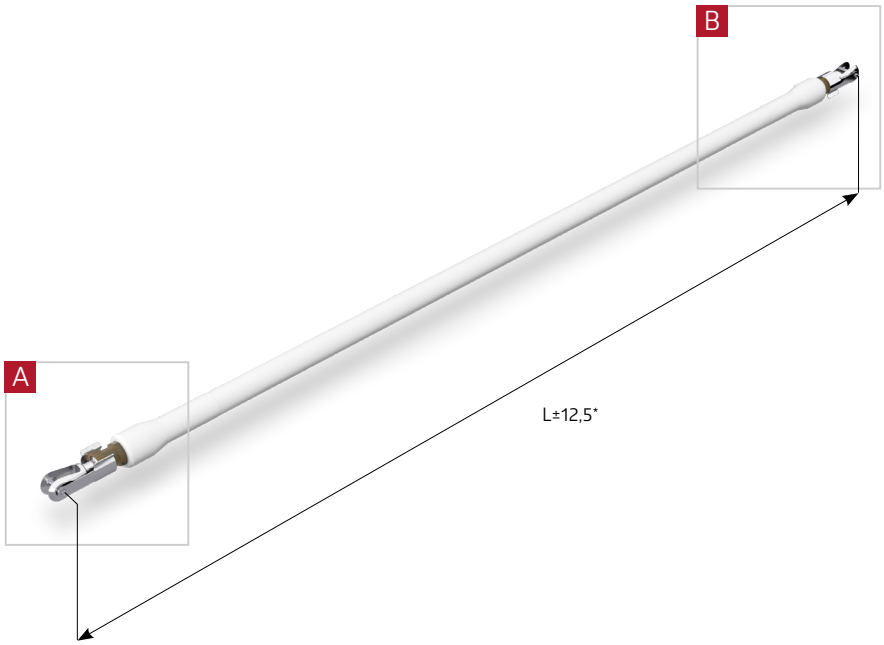

View A

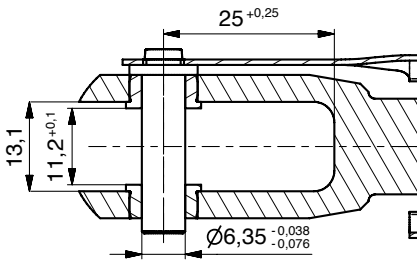

View B

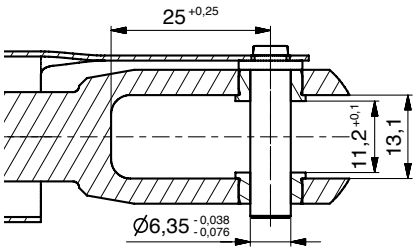

* adjustable range [mm]

ABS-no.	GMT-no.	Ultimate tension load [kN]	Ultimate compression load [kN]	Weight [g]	Rod body outer Ø [mm]	Length L [mm]	Material Rod body	Material Ends
ABS2180 B5 1235 LG	65037903	18	4,5	577	26,1	1235	CFRP	AL
ABS2180 B5 1280 LG	65037902	18	4,5	592	26,1	1280	CFRP	AL
ABS2180 B5 1329 LG	65037901	18	4,5	607	26,1	1329	CFRP	AL
ABS2180 B5 1450 LG	65037904	18	4,5	647	26,1	1450	CFRP	AL

TIE RODS ACC. TO ABS2180 GMT-NO. 650380..

Traceparts

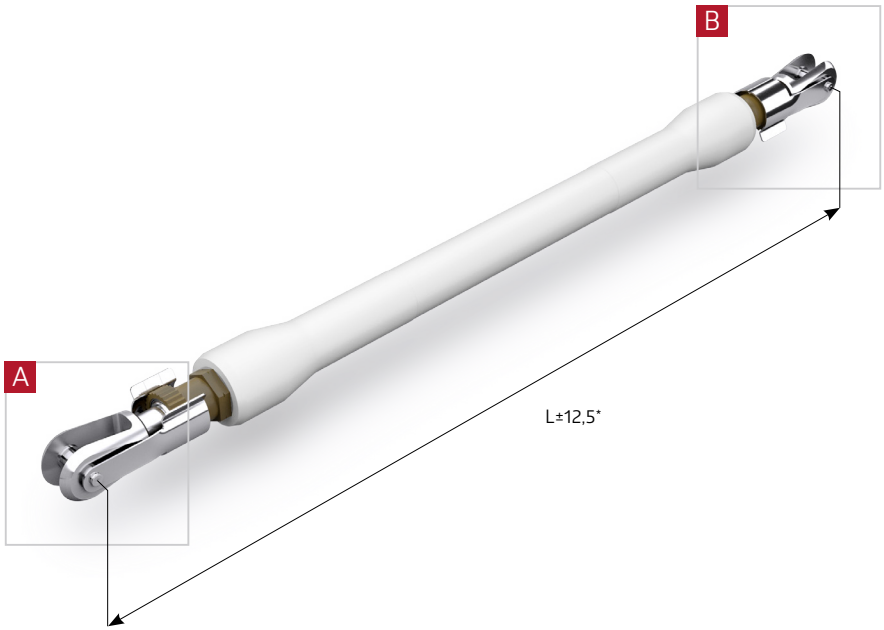

View A

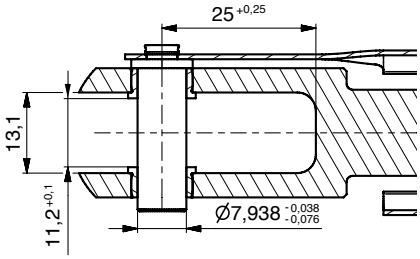

View B

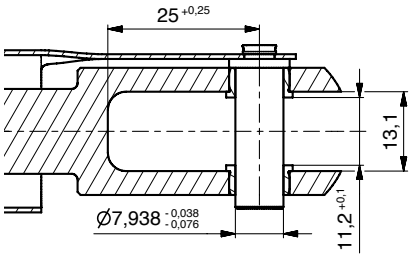

* adjustable range [mm]

ABS-no.	GMT-no.	Ultimate tension load [kN]	Ultimate compression load [kN]	Weight [g]	Rod body outer Ø [mm]	Length L [mm]	Material Rod body	Material Ends
ABS2180 B6 0500 KG	65038003	40,5	23	360	26,1	500	CFRP	AL
ABS2180 B6 0606 KG	65038001	40,5	23	394	26,1	606	CFRP	AL
ABS2180 B6 0624 KG	65038002	40,5	23	400	26,1	624	CFRP	AL
ABS2180 B6 0650 KG	65038004	40,5	23	409	26,1	650	CFRP	AL

TIE RODS ACC. TO ABS2180 GMT-NO. 650381..

Traceparts

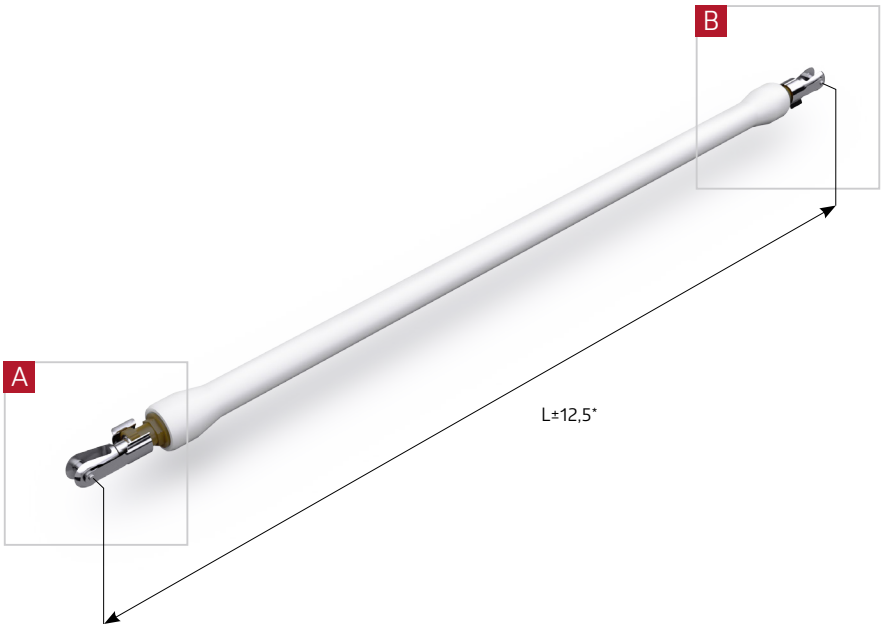

View A

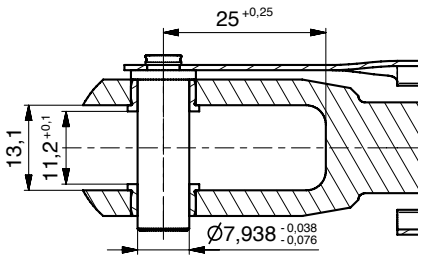

View B

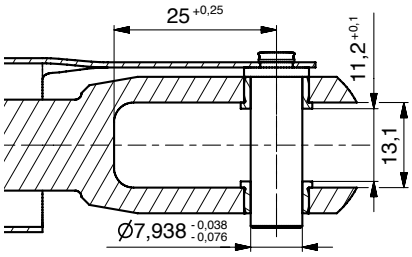

* adjustable range [mm]

ABS-no.	GMT-no.	Ultimate tension load [kN]	Ultimate compression load [kN]	Weight [g]	Rod body outer Ø [mm]	Length L [mm]	Material Rod body	Material Ends
ABS2180 C2 1000 MG	65038104	30	6	477	31	1000	CFRP	AL
ABS2180 C2 1225 MG	65038105	30	6	529	31	1225	CFRP	AL
ABS2180 C2 1255 MG	65038106	30	6	536	31	1255	CFRP	AL
ABS2180 C2 1280 MG	65038107	30	6	542	31	1280	CFRP	AL
ABS2180 C2 1303 MG	65038101	30	6	546	31	1303	CFRP	AL
ABS2180 C2 1322 MG	65038102	30	6	551	31	1322	CFRP	AL
ABS2180 C2 1334 MG	65038103	30	6	553	31	1334	CFRP	AL

TIE RODS ACC. TO ABS2180 GMT-NO. 650382..

Traceparts

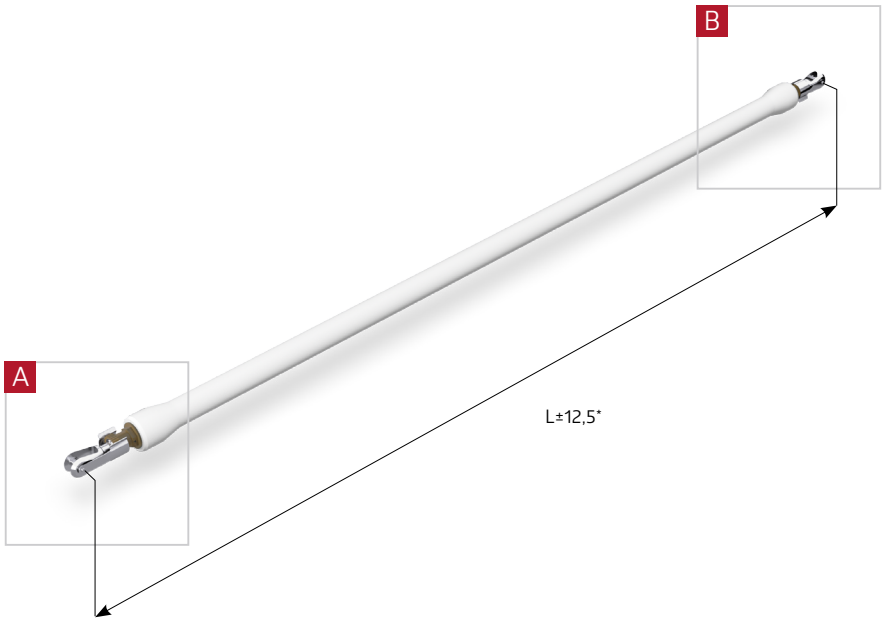

View A

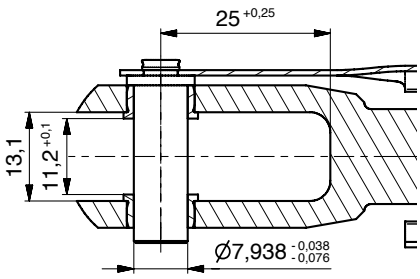

View B

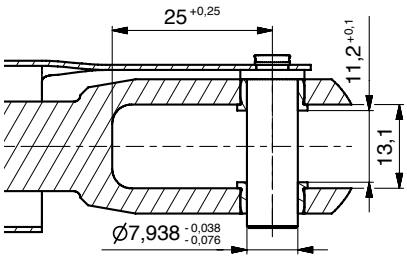

* adjustable range [mm]

ABS-no.	GMT-no.	Ultimate tension load [kN]	Ultimate compression load [kN]	Weight [g]	Rod body outer Ø [mm]	Length L [mm]	Material Rod body	Material Ends
ABS2180 C3 1341 MG	65038201	30	6	597	31,5	1341	CFRP	AL
ABS2180 C3 1385 MG	65038202	30	6	609	31,5	1385	CFRP	AL
ABS2180 C3 1426 MG	65038203	30	6	620	31,5	1426	CFRP	AL
ABS2180 C3 1450 MG	65038204	30	6	626	31,5	1450	CFRP	AL

TIE RODS ACC. TO ABS2180 GMT-NO. 650383..

Traceparts

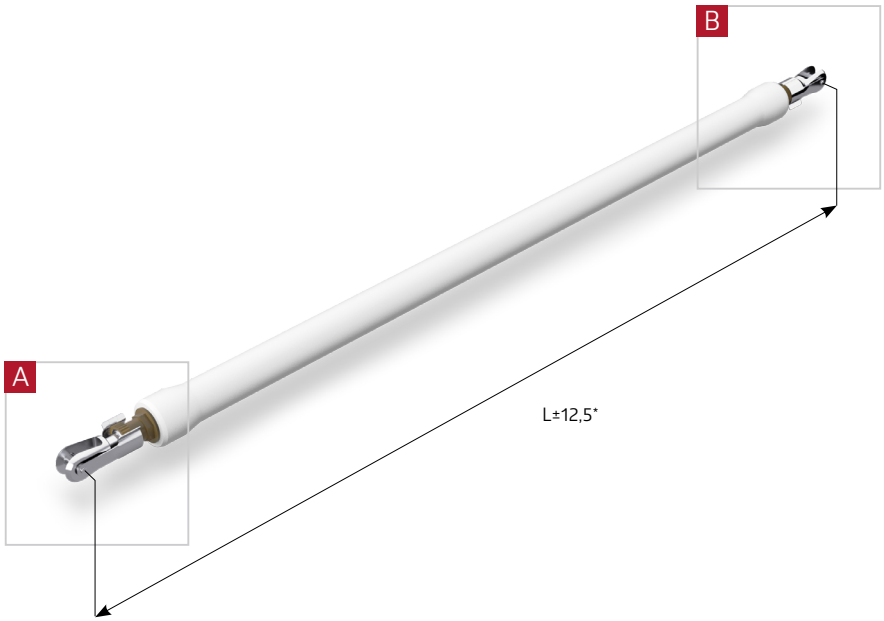

View A

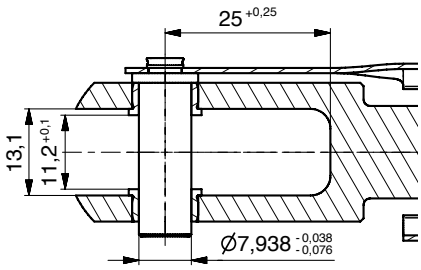

View B

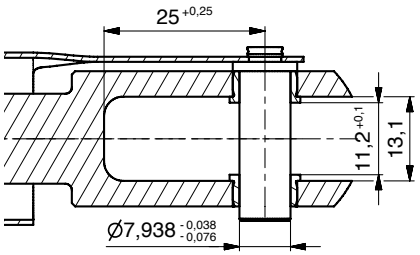

* adjustable range [mm]

ABS-no.	GMT-no.	Ultimate tension load [kN]	Ultimate compression load [kN]	Weight [g]	Rod body outer Ø [mm]	Length L [mm]	Material Rod body	Material Ends
ABS2180 C5 1000 KG	65038303	40,5	23	771	35,5	1000	CFRP	AL
ABS2180 C5 1225 KG	65038301	40,5	23	906	35,5	1225	CFRP	AL
ABS2180 C5 1255 KG	65038302	40,5	23	923	35,5	1255	CFRP	AL

TIE RODS ACC. TO ABS2180 GMT-NO. 650384..

Traceparts

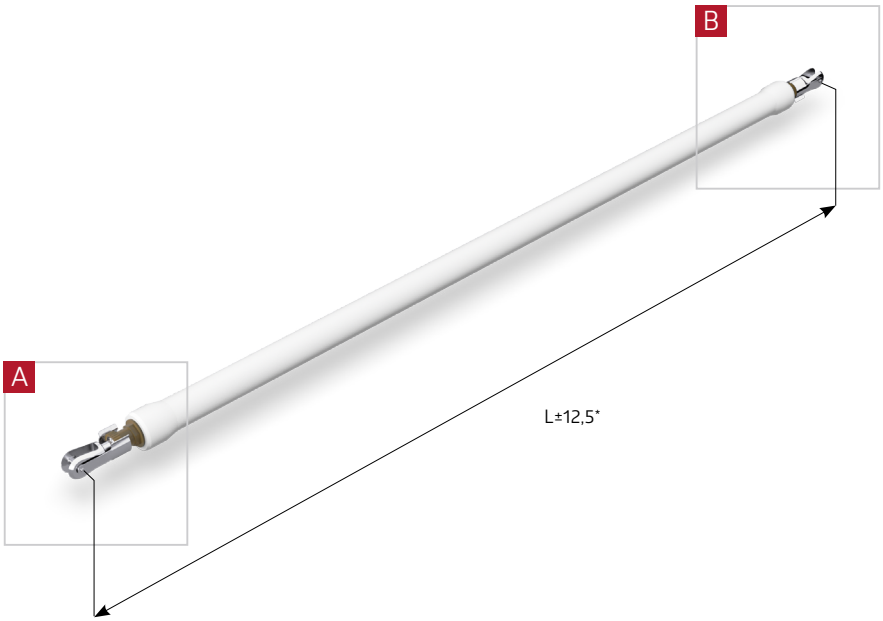

View A

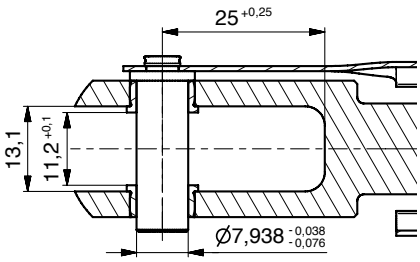

View B

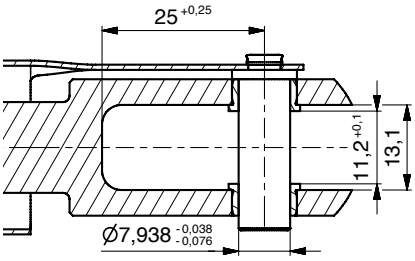

* adjustable range [mm]

ABS-no.	GMT-no.	Ultimate tension load [kN]	Ultimate compression load [kN]	Weight [g]	Rod body outer Ø [mm]	Length L [mm]	Material Rod body	Material Ends
ABS2180 C6 1260 KG	65038403	40,5	23	972	36	1260	CFRP	AL
ABS2180 C6 1280 KG	65038401	40,5	23	984	36	1280	CFRP	AL
ABS2180 C6 1304 KG	65038402	40,5	23	1000	36	1304	CFRP	AL

TIE RODS ACC. TO ABS2180 GMT-NO. 650385..

Traceparts

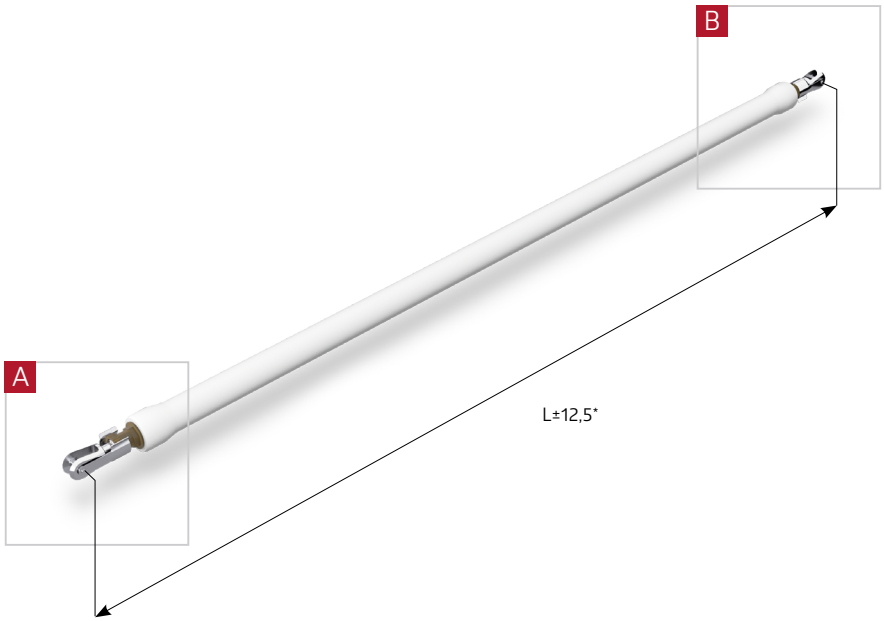

View A

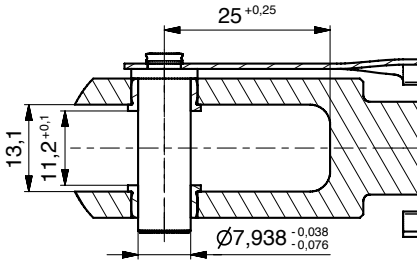

View B

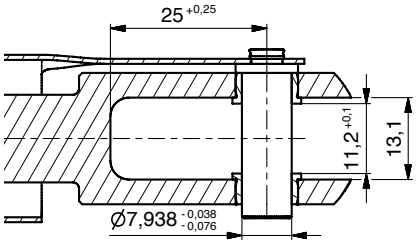

* adjustable range [mm]

ABS-no.	GMT-no.	Ultimate tension load [kN]	Ultimate compression load [kN]	Weight [g]	Rod body outer Ø [mm]	Length L [mm]	Material Rod body	Material Ends
ABS2180 C7 1310 KG	65038503	40,5	23	1040	36	1310	CFRP	AL
ABS2180 C7 1341 KG	65038501	40,5	23	1061	36	1341	CFRP	AL
ABS2180 C7 1334 KG	65038502	40,5	23	1056	36	1334	CFRP	AL
ABS2180 C7 1350 KG	65038504	40,5	23	1067	36	1350	CFRP	AL

TIE RODS ACC. TO ABS2180 GMT-NO. 650386..

Traceparts

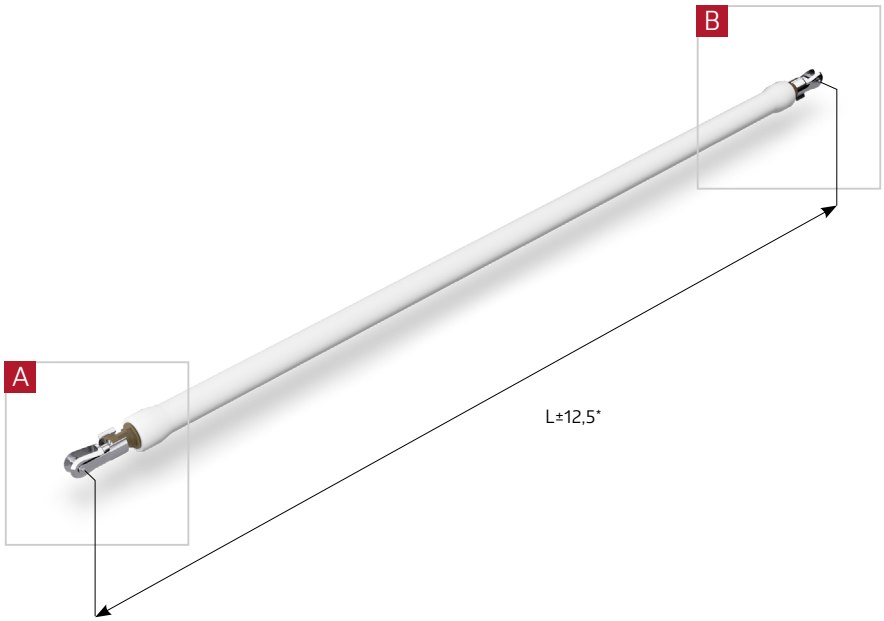

View A

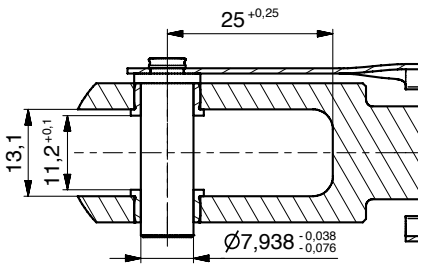

View B

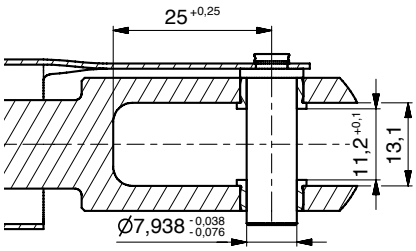

* adjustable range [mm]

ABS-no.	GMT-no.	Ultimate tension load [kN]	Ultimate compression load [kN]	Weight [g]	Rod body outer Ø [mm]	Length L [mm]	Material Rod body	Material Ends
ABS2180 C8 1355 KG	65038602	40,5	23	1179	36	1355	CFRP	AL
ABS2180 C8 1430 KG	65038601	40,5	23	1237	36	1430	CFRP	AL

TIE RODS ACC. TO ABS2180 GMT-NO. 650427..

Traceparts

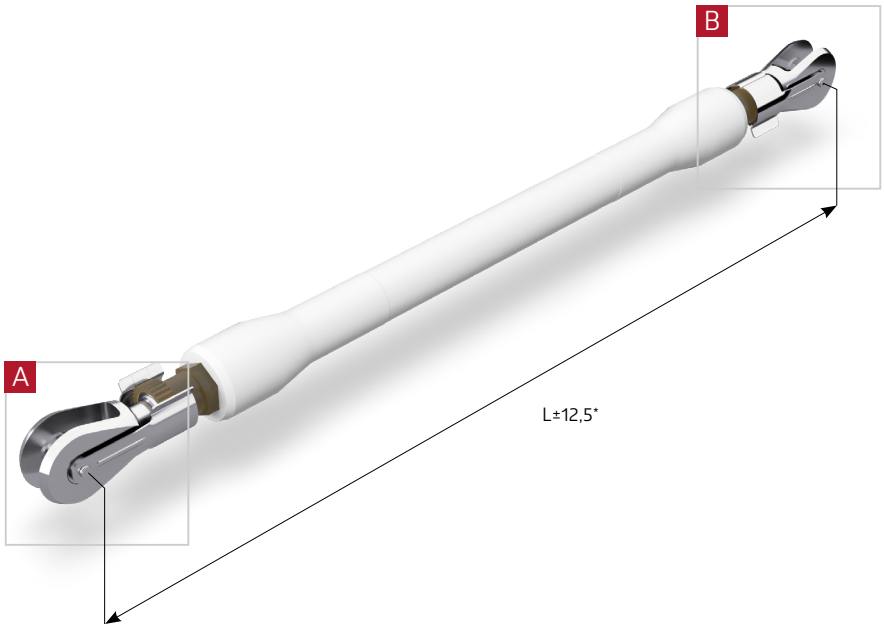

View A

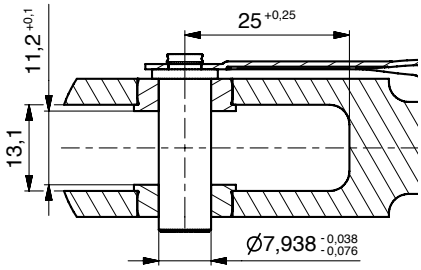

View B

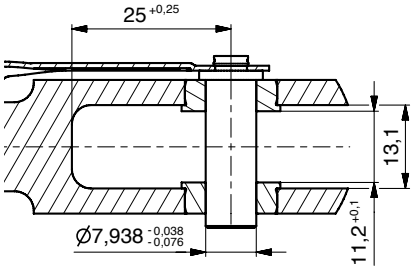

* adjustable range [mm]

ABS-no.	GMT-no.	Ultimate tension load [kN]	Ultimate compression load [kN]	Weight [g]	Rod body outer Ø [mm]	Length L [mm]	Material Rod body	Material Ends
ABS2180 B7 0500 PG	65042703	50	23	401	26,1	500	CFRP	AL
ABS2180 B7 0606 PG	65042701	50	23	435	26,1	606	CFRP	AL
ABS2180 B7 0624 PG	65042702	50	23	441	26,1	624	CFRP	AL
ABS2180 B7 0650 PG	65042704	50	23	449	26,1	650	CFRP	AL

TIE RODS ACC. TO ABS2180 GMT-NO. 650428..

Traceparts

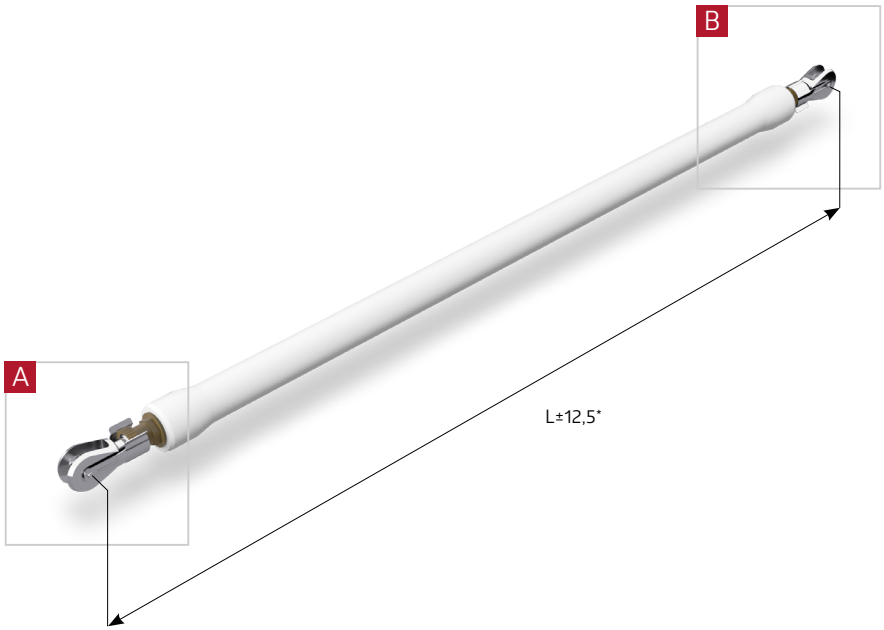

View A

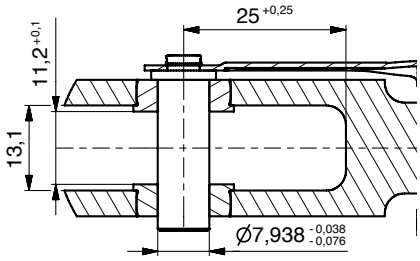

View B

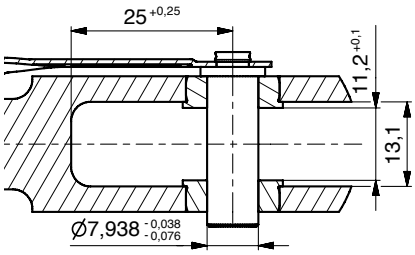

* adjustable range [mm]

ABS-no.	GMT-no.	Ultimate tension load [kN]	Ultimate compression load [kN]	Weight [g]	Rod body outer Ø [mm]	Length L [mm]	Material Rod body	Material Ends
ABS2180 E1 1000 PG	65042803	50	23	816	35,5	1000	CFRP	AL
ABS2180 E1 1225 PG	65042801	50	23	950	35,5	1225	CFRP	AL
ABS2180 E1 1255 PG	65042802	50	23	968	35,5	1255	CFRP	AL

DESCRIPTION TO TIE RODS ABS1263

Mainly applicable for interior fittings and mounting of units in fuselage and cabin, also usable as structure part.

Patented design

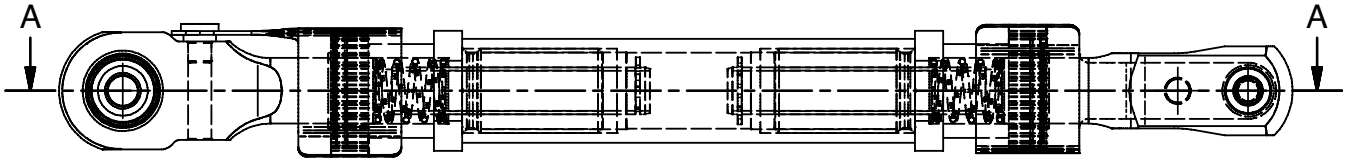

A-A

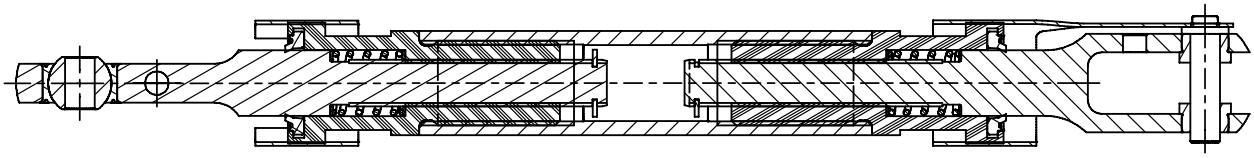

Advantage:

1. Simple and fast mounting by means of patented locking element.
2. Length adjustment in mounted condition is also possible with closed locking element.
3. Bolt for load transmission is integrated in the locking element (only for ABS1263).
4. Optional blocking available for locking element avoids that the longitudinal adjusted components are shifted unintended.
5. Integrated securing against hollowing avoids too far unscrew of the thread while mounting.
6. Threaded plastic inserts avoids problems with corrosion inside the thread.
7. Threaded plastic inserts assures thermic insulation between fuselage and cabin.
8. Threaded plastic inserts assures acoustic insulation between fuselage and cabin.
9. Integrated sealing in the threaded inserts avoids the penetration of the inner thread with fluids.
10. Fork end with titan bushings for flexible design by modification of the titan bushings with equal fork geometry.
11. Fork end with titan bushings avoids problems with corrosion for contact with carbon fibre or aluminium parts.

Designation

Description block	Identity block				
Tie rod	ABS1263	A1	2560	V	G

Number of this standard
Assembly code:
Size code:
Fatigue Load category:
Clip code:

COMPONENTS OF TIE RODS ABS1263

Components and their function

Rod end

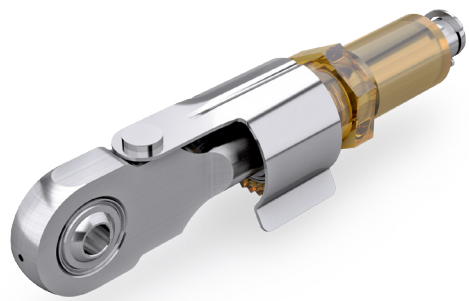

Fork end

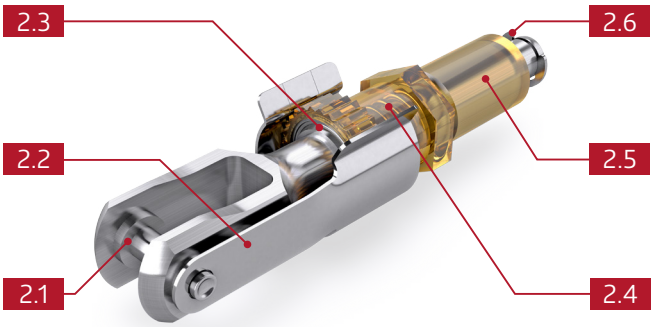

2.1

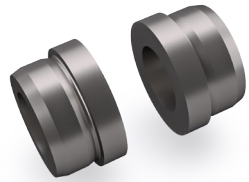

Titanium bushes

- Aids better load transmission.
- Higher surface pressure possible.
- Through change of geometry
- (boring/width) modular structure with same geometry of fork possible.

2.2

Locking clip (Clip code G)

Quick-locking mechanism for assembly by hand. Serves as anti-twist plate and aids in transmission of loads.

OR

2.2

closed

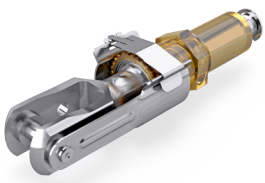

open

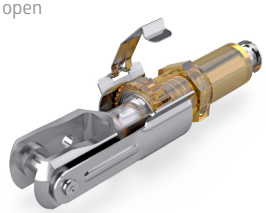

Locking clip with retaining clamp (Clip code H)

The locking clip with retaining clamp serves for locking of rotation and consequently prevents from unintentional variation of length of the Tie Rod after the final assembly.

2.3

Rubber ring

Prevents penetration of water and dust into rod assembly.

2.4

Spring

Links threads of threaded sleeve and fork end against each other and prevents any thread play.

2.5

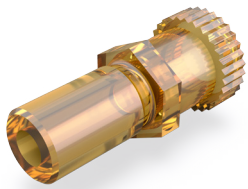

Plastic insert

Aids in transmission of loads. Plastic prevents corrosion in thread and acts as an insulator.

2.6

Safety ring

Prevents and controls too far turning off the thread.

TIE RODS ACC. TO ABS1263 GMT-NO. 650016..

Traceparts

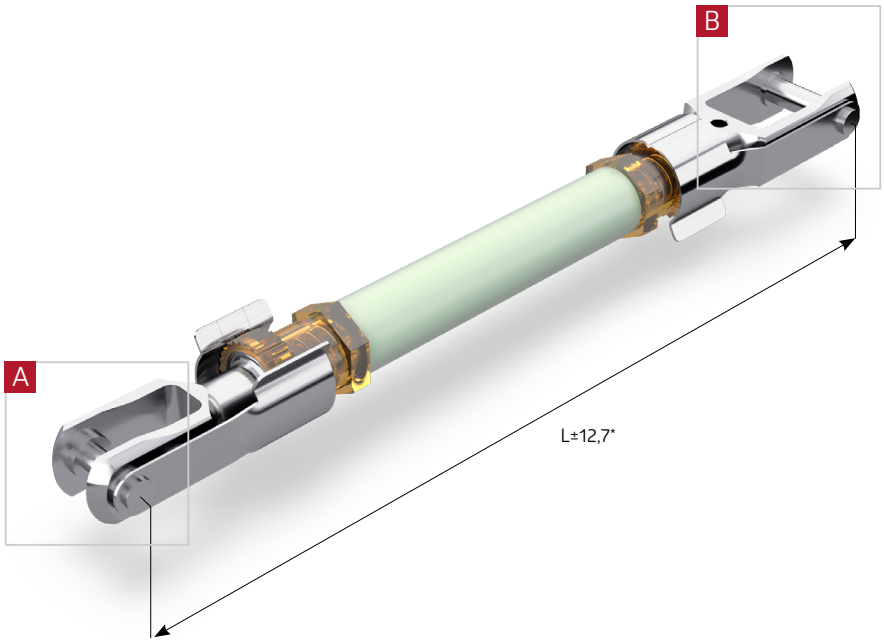

View A

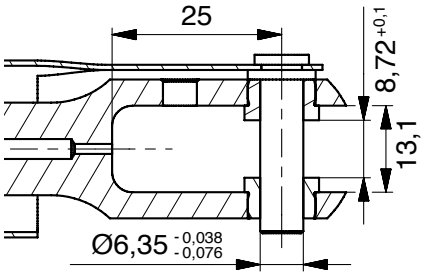

View B

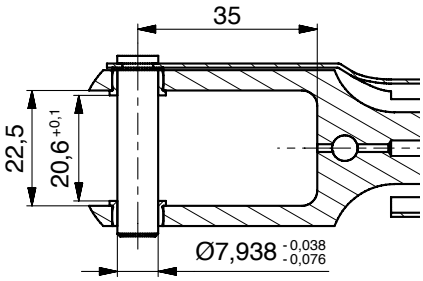

* adjustable range [mm]

ABS-no.	GMT-no.	Ultimate tension load [kN]	Ultimate compression load [kN]	Weight [g]	Rod body outer Ø [mm]	Length L [mm]	Material Rod body	Material Ends
ABS1263 A1 2560 VG	65001618	14	4	191	20	256	AL	AL
ABS1263 A1 2861 VG	65001638	14	4	201	20	286,1	AL	AL
ABS1263 A1 3035 VG	65001606	14	4	207	20	303,5	AL	AL
ABS1263 A1 3240 VG	65001605	14	4	213	20	324	AL	AL
ABS1263 A1 3414 VG	65001619	14	4	219	20	341,4	AL	AL
ABS1263 A1 3588 VG	65001644	14	4	225	20	358,8	AL	AL
ABS1263 A1 3750 VG	65001616	14	4	229,5	20	375	AL	AL
ABS1263 A1 3762 VG	65001620	14	4	230	20	376,2	AL	AL
ABS1263 A1 3936 VG	65001641	14	4	236	20	393,6	AL	AL
ABS1263 A1 4110 VG	65001629	14	4	241	20	411	AL	AL
ABS1263 A1 4284 VG	65001621	14	4	247	20	428,4	AL	AL
ABS1263 A1 4458 VG	65001622	14	4	252	20	445,8	AL	AL
ABS1263 A1 4530 VG	65001604	14	4	254	20	453	AL	AL
ABS1263 A1 4620 VG	65001617	14	4	257	20	462	AL	AL
ABS1263 A1 4632 VG	65001623	14	4	258	20	463,2	AL	AL
ABS1263 A1 4730 PG	65001603	18	5	261	20	473	AL	AL
ABS1263 A1 4806 VG	65001624	14	4	263	20	480,6	AL	AL
ABS1263 A1 4980 VG	65001625	14	4	269	20	498	AL	AL
ABS1263 A1 5120 VG	65001615	14	4	273	20	512	AL	AL
ABS1263 A1 5154 VG	65001642	14	4	280	20	515,4	AL	AL
ABS1263 A1 5328 VG	65001630	14	4	280	20	532,8	AL	AL
ABS1263 A1 5502 VG	65001645	14	4	286	20	550,2	AL	AL
ABS1263 A1 5676 VG	65001646	14	4	291	20	567,6	AL	AL
ABS1263 A1 5850 VG	65001647	14	4	297	20	585	AL	AL

TIE RODS ACC. TO ABS1263 GMT-NO. 650016..

Traceparts

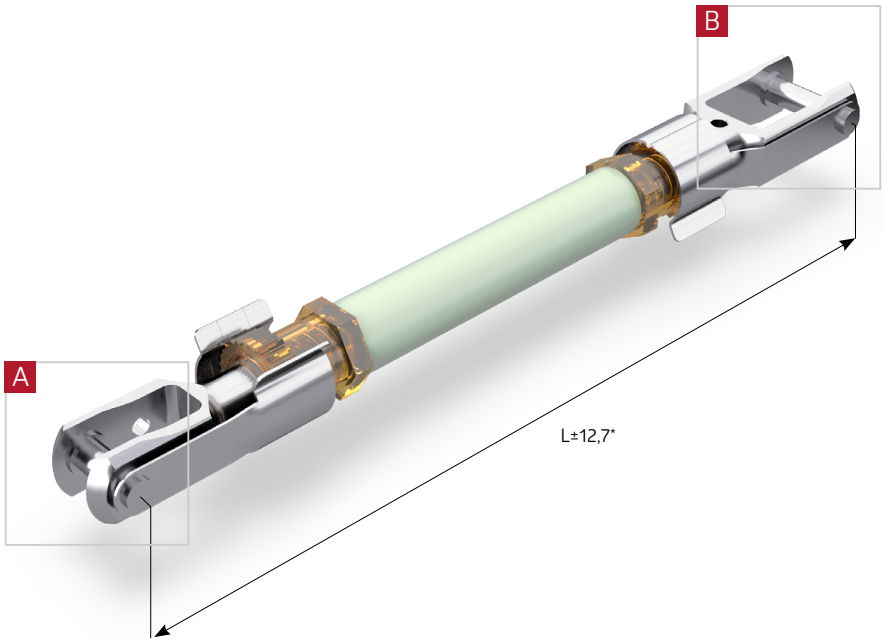

View A

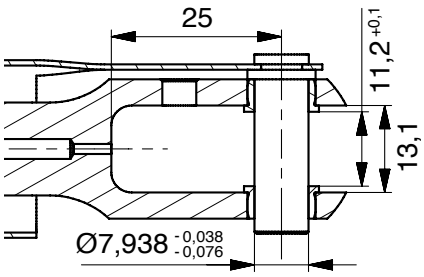

View B

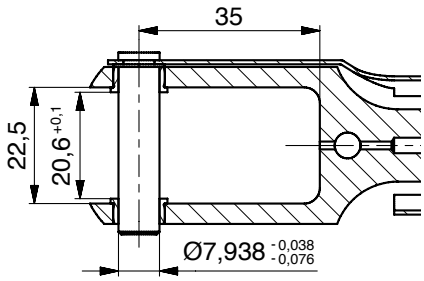

* adjustable range [mm]

ABS-no.	GMT-no.	Ultimate tension load [kN]	Ultimate compression load [kN]	Weight [g]	Rod body outer Ø [mm]	Length L [mm]	Material Rod body	Material Ends
ABS1263 A2 2560 VG	65001648	14	4	194	20	256	AL	AL
ABS1263 A2 2861 VG	65001649	14	4	203	20	286,1	AL	AL
ABS1263 A2 3035 VG	65001650	14	4	209	20	303,5	AL	AL
ABS1263 A2 3240 VG	65001631	14	4	215	20	324	AL	AL
ABS1263 A2 3414 VG	65001632	14	4	221	20	341,4	AL	AL
ABS1263 A2 3588 VG	65001651	14	4	226	20	358,8	AL	AL
ABS1263 A2 3762 VG	65001626	14	4	232	20	376,2	AL	AL
ABS1263 A2 3770 VG	65001609	14	4	232	20	377	AL	AL
ABS1263 A2 3936 VG	65001636	14	4	238	20	393,6	AL	AL
ABS1263 A2 3940 VG	65001608	14	4	238	20	394	AL	AL
ABS1263 A2 4110 VG	65001643	14	4	243	20	411	AL	AL
ABS1263 A2 4284 VG	65001637	14	4	249	20	428,4	AL	AL
ABS1263 A2 4458 VG	65001633	14	4	254	20	445,8	AL	AL
ABS1263 A2 4632 VG	65001652	14	4	260	20	463,2	AL	AL
ABS1263 A2 4806 VG	65001627	14	4	265	20	480,6	AL	AL
ABS1263 A2 4980 VG	65001628	14	4	271	20	498	AL	AL
ABS1263 A2 5154 VG	65001640	14	4	276	20	515,4	AL	AL
ABS1263 A2 5275 VG	65001607	14	4	280	20	527,5	AL	AL
ABS1263 A2 5328 VG	65001639	14	4	282	20	532,8	AL	AL
ABS1263 A2 5502 VG	65001653	14	4	287	20	550,2	AL	AL
ABS1263 A2 5676 VG	65001634	14	4	293	20	567,6	AL	AL
ABS1263 A2 5850 VG	65001635	14	4	299	20	585	AL	AL

TIE RODS ACC. TO ABS1263 GMT-NO. 650018..

Traceparts

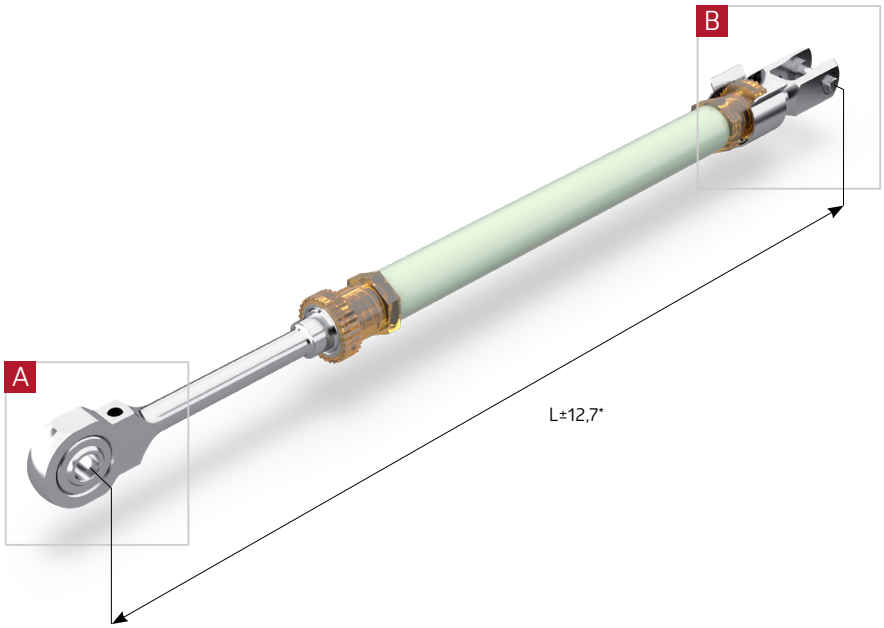

View A

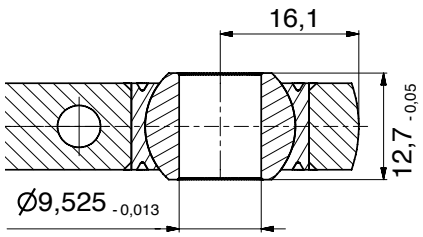

View B

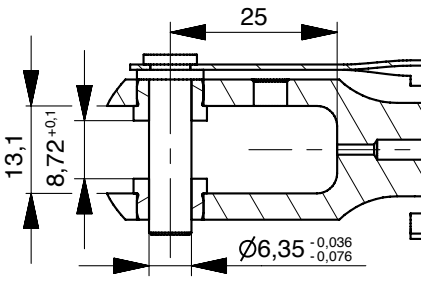

* adjustable range [mm]

ABS-no.	GMT-no.	Ultimate tension load [kN]	Ultimate compression load [kN]	Weight [g]	Rod body outer Ø [mm]	Length L [mm]	Material Rod body	Material Ends
ABS1263 B1 3940 RG	65001802	3	7	222	20	394	AL	AL
ABS1263 B2 3940 SG	65001803	6	6	220	20	394	AL	AL
ABS1263 C3 3766 VG	65001807	14	4	217	20	376,6	AL	Al
ABS1263 C3 3940 VG	65001806	14	4	223	20	394	AL	AL
ABS1263 C3 4114 VG	65001808	14	4	228	20	411,4	AL	AL

TIE RODS ACC. TO ABS1263 GMT-NO. 650023.., 650046..

Traceparts

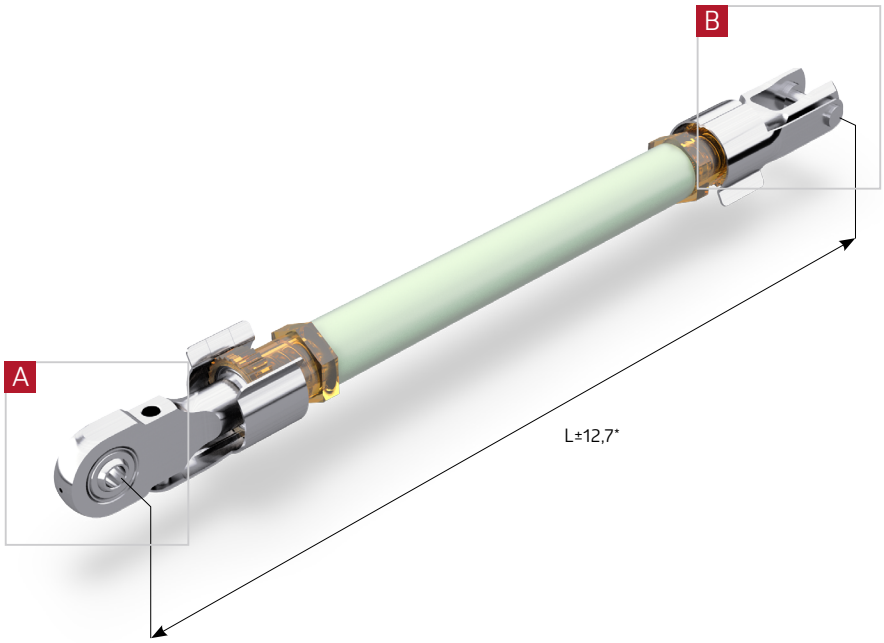

View A

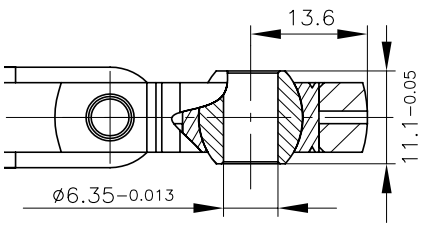

View B

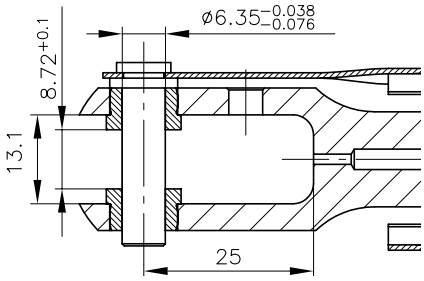

* adjustable range [mm]

ABS-no.	GMT-no.	Ultimate tension load [kN]	Ultimate compression load [kN]	Weight [g]	Rod body outer Ø [mm]	Length L [mm]	Material Rod body	Material Ends
ABS1263 B7 3000 AG	65002311	8	1,6	199	20	300	AL	AL
ABS1263 B7 3050 AG	65002307	8	1,6	201	20	305	AL	AL
ABS1263 B7 3435 HG	65002314	18	8	217	20	343,5	AL	AL
ABS1263 B7 3500 AG	65002316	8	1,6	215	20	350	AL	AL
ABS1263 B7 3500 HG	65002319	18	8	215	20	350	AL	AL
ABS1263 B7 3600 HG	65002315	18	8	222	20	360	AL	AL
ABS1263 B7 3600 AG	65002302	8	1,6	218	20	360	AL	AL
ABS1263 B7 4000 AG	65002301	8	1,6	231	20	400	AL	AL
ABS1263 B7 4000 HG	65002313	18	8	231	20	400	AL	AL
ABS1263 B7 4010 VG	65002310	14	4	231	20	401	AL	AL
ABS1263 B7 4010 HG	65002318	18	8	231	20	401	AL	AL
ABS1263 B7 4500 HG	65002320	18	8	255	20	450	AL	AL
ABS1263 B7 4830 AG	65002308	8	1,6	258	20	483	AL	AL
ABS1263 B7 5000 AG	65002303	8	1,6	263	20	500	AL	AL
ABS1263 B7 5000 HG	65002306	18	8	263	20	500	AL	AL
ABS1263 B7 5030 AG	65002304	8	1,6	264	20	503	AL	AL
ABS1263 B7 5500 HG	65002317	18	8	279	20	550	AL	AL
ABS1263 B7 6000 AG	65002309	8	1,6	295	20	600	AL	AL
ABS1263 B7 6455 HG	65004601	18	8	438	25,4	645,5	AL	AL
ABS1263 B7 7000 HG	65004602	18	8	438	25,4	700	AL	AL
ABS1263 B7 8200 AG	65002312	8	1,6	365	20	820	AL	AL
ABS1263 B7 9000 HG	65004603	18	8	598	25,4	900	AL	AL

TIE RODS ACC. TO ABS1263 GMT-NO. 650024..

Traceparts

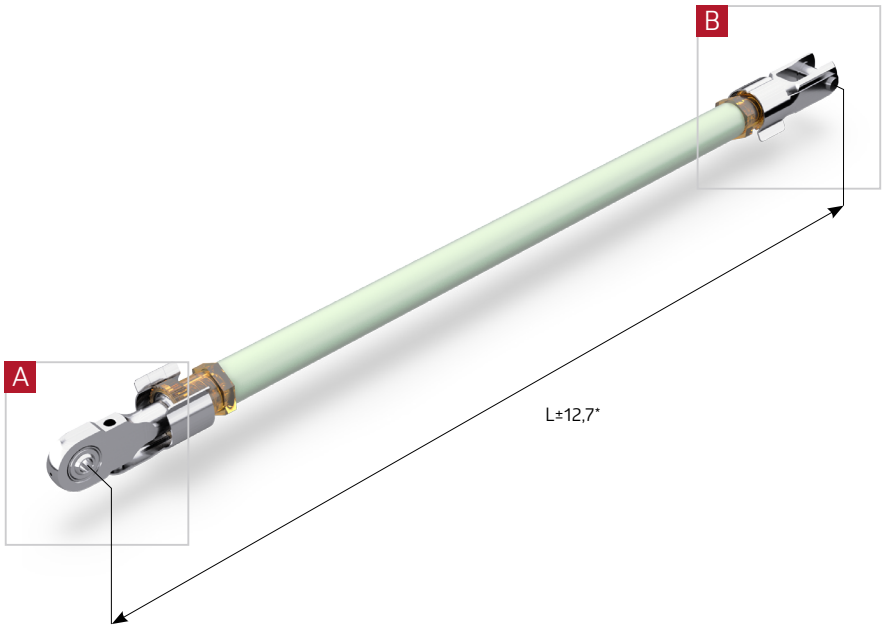

View A

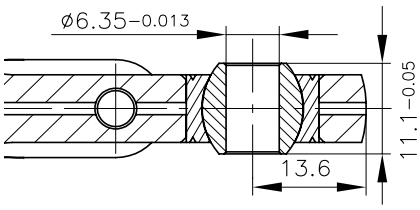

View B

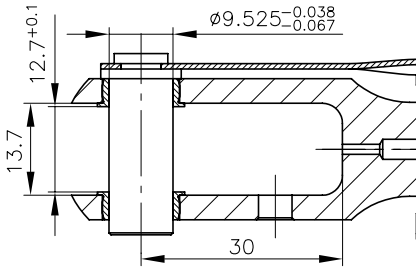

* adjustable range [mm]

ABS-no.	GMT-no.	Ultimate tension load [kN]	Ultimate compression load [kN]	Weight [g]	Rod body outer Ø [mm]	Length L [mm]	Material Rod body	Material Ends
ABS1263 B8 5000 HG	65002401	18	8	270	20	500	AL	AL
ABS1263 B8 5250 AG	65002403	8	1,6	278	20	525	AL	AL
ABS1263 B8 6000 HG	65002402	18	8	418	25,4	600	AL	AL

TIE RODS ACC. TO ABS1263 GMT-NO. 650025..

Traceparts

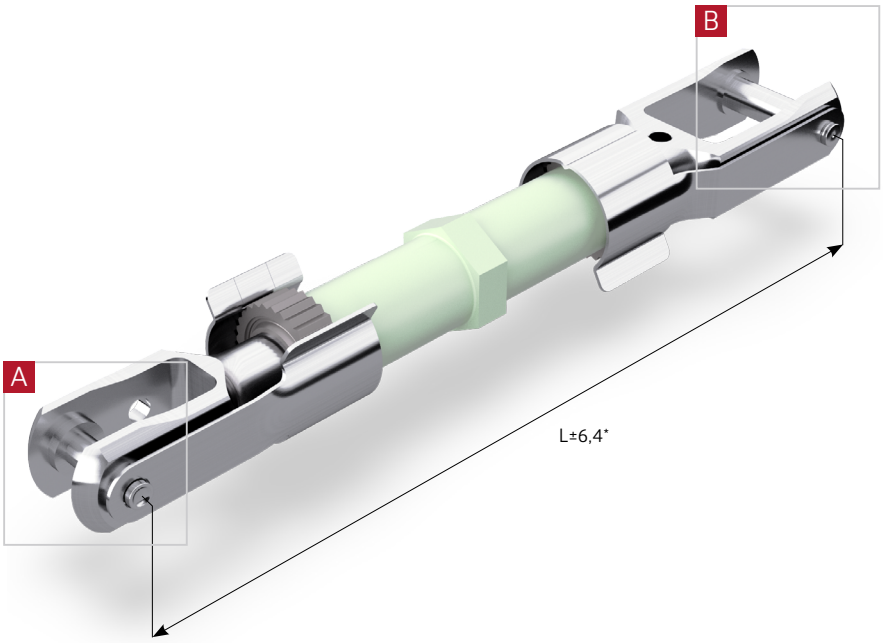

View A

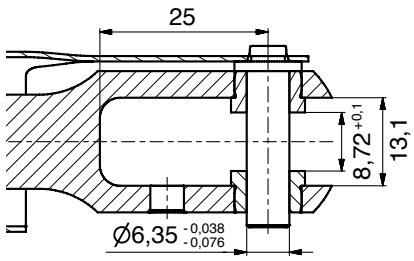

View B

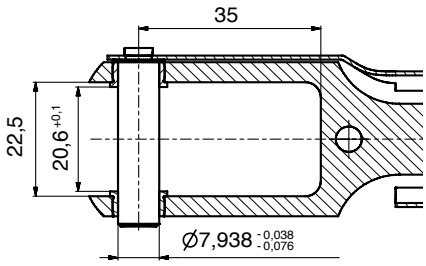

* adjustable range [mm]

ABS-no.	GMT-no.	Ultimate tension load [kN]	Ultimate compression load [kN]	Weight [g]	Rod body outer Ø [mm]	Length L [mm]	Material Rod body	Material Ends	Material threaded insert
ABS1263 A9 1690 VG	65002502	14	4	297	20	169	AL	CRES	Titan
ABS1263 A9 1740 VG	65002503	14	4	298	20	174	AL	CRES	Titan
ABS1263 A9 1790 VG	65002504	14	4	300	20	179	AL	CRES	Titan
ABS1263 A9 1840 VG	65002506	14	4	301	20	184	AL	CRES	Titan
ABS1263 A9 1890 VG	65002510	14	4	303	20	189	AL	CRES	Titan
ABS1263 A9 1940 VG	65002511	14	4	304	20	194	AL	CRES	Titan
ABS1263 A9 1990 VG	65002509	14	4	308	20	199	AL	CRES	Titan
ABS1263 A9 2040 VG	65002512	14	4	308	20	204	AL	CRES	Titan
ABS1263 A9 2090 VG	65002513	14	4	309	20	209	AL	CRES	Titan
ABS1263 A9 2140 VG	65002505	14	4	311	20	214	AL	CRES	Titan
ABS1263 A9 2190 VG	65002508	14	4	314	20	219	AL	CRES	Titan
ABS1263 A9 2240 VG	65002514	14	4	314	20	224	AL	CRES	Titan
ABS1263 A9 2290 VG	65002515	14	4	316	20	229	AL	CRES	Titan
ABS1263 A9 2340 VG	65002516	14	4	317	20	234	AL	CRES	Titan
ABS1263 A9 2390 VG	65002507	14	4	319	20	239	AL	CRES	Titan

TIE RODS ACC. TO ABS1263 GMT-NO. 650029..

Traceparts

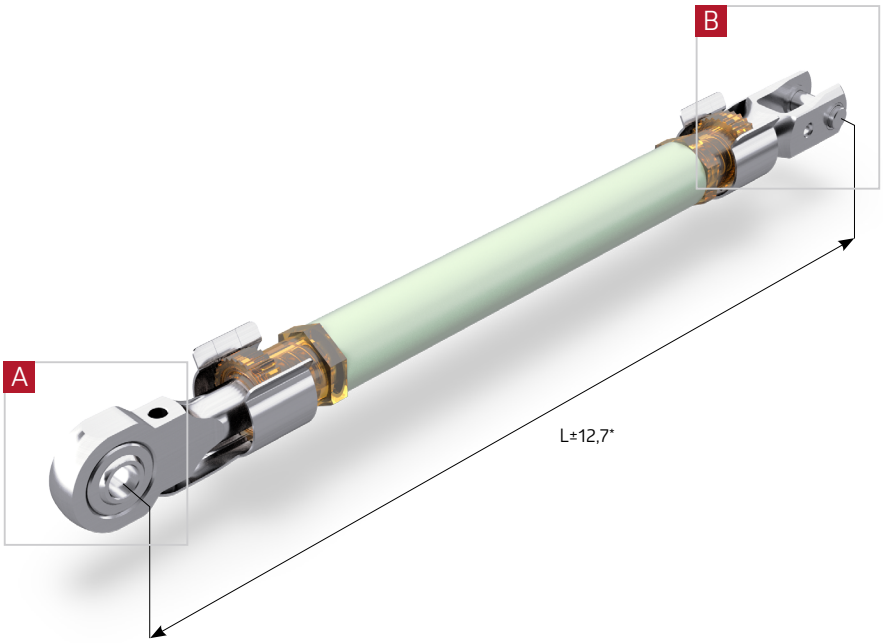

View A

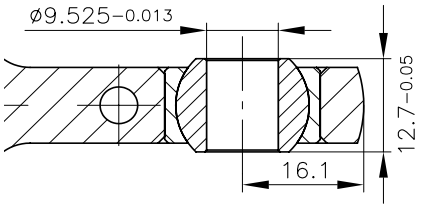

View B

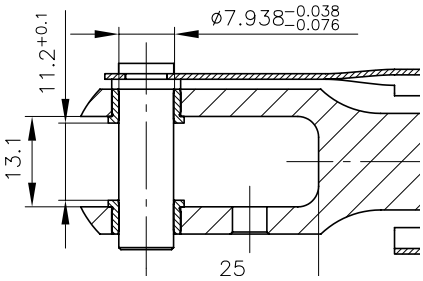

* adjustable range [mm]

ABS-no.	GMT-no.	Ultimate tension load [kN]	Ultimate compression load [kN]	Weight [g]	Rod body outer Ø [mm]	Length L [mm]	Material Rod body	Material Ends
ABS1263 C2 3000 KG	65002906	42	20	400	22,2	300	AL	CRES
ABS1263 C2 3400 KG	65002904	42	20	428	22,2	340	AL	CRES
ABS1263 C2 4000 KG	65002901	42	20	463	25,4	400	AL	CRES
ABS1263 C2 4400 KG	65002905	42	20	487	25,4	440	AL	CRES
ABS1263 C2 4500 KG	65002902	42	20	493	25,4	450	AL	CRES
ABS1263 C2 5000 KG	65002903	42	20	523	25,4	500	AL	CRES
ABS1263 C2 6000 KG	65002908	42	20	582	25,4	600	AL	CRES
ABS1263 C2 8100 TG	65002907	18	13	707	25,4	810	AL	CRES

TIE RODS ACC. TO ABS1263 GMT-NO. 650032..

Traceparts

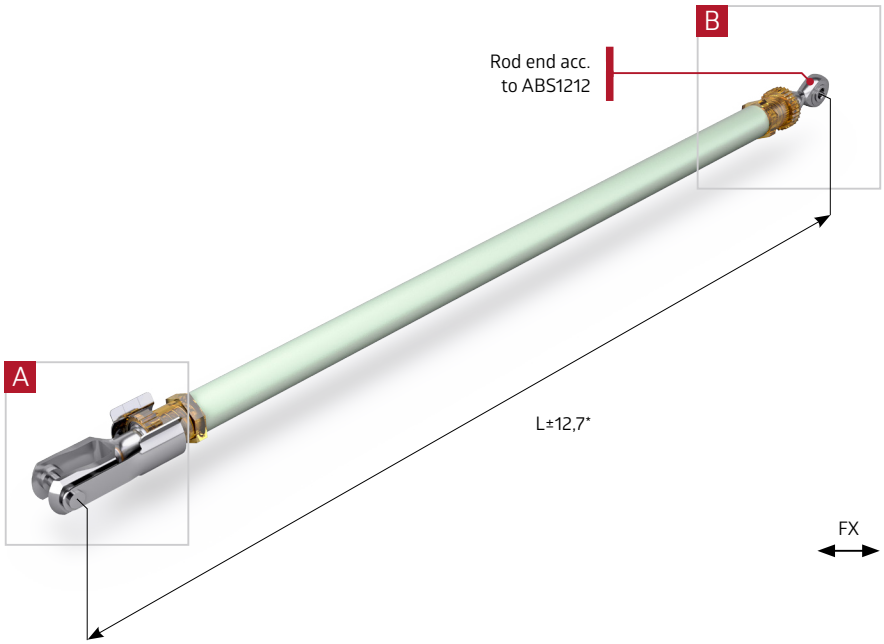

View A

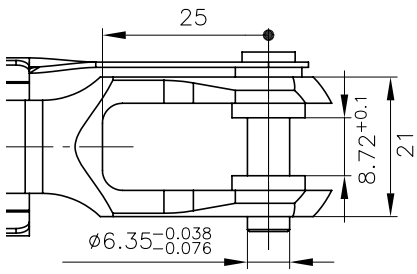

View B

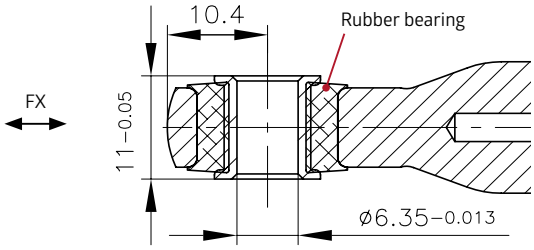

* adjustable range [mm]

ABS-no.	GMT-no.	Ultimate tension load [kN]	Ultimate compression load [kN]	Weight [g]	Rod body outer Ø [mm]	Length L [mm]	Material Rod body	Material Ends
ABS1263 B3 4100 MG	65003208	10	2	207	20	410	AL	AL
ABS1263 B3 4847 MG	65003207	10	2	231	20	484,7	AL	AL
ABS1263 B3 4917 MG	65003206	10	2	233	20	491,7	AL	AL
ABS1263 B3 5053 MG	65003205	10	2	238	20	505,3	AL	AL
ABS1263 B3 5170 MG	65003204	10	2	241	20	517	AL	AL
ABS1263 B3 5270 MG	65003203	10	2	244	20	527	AL	AL
ABS1263 B3 5340 MG	65003202	10	2	247	20	534	AL	AL
ABS1263 B3 5505 MG	65003201	10	2	252	20	550,5	AL	AL

Spring Characteristic Fx

TIE RODS ACC. TO ABS1263 GMT-NO. 65004501

Traceparts

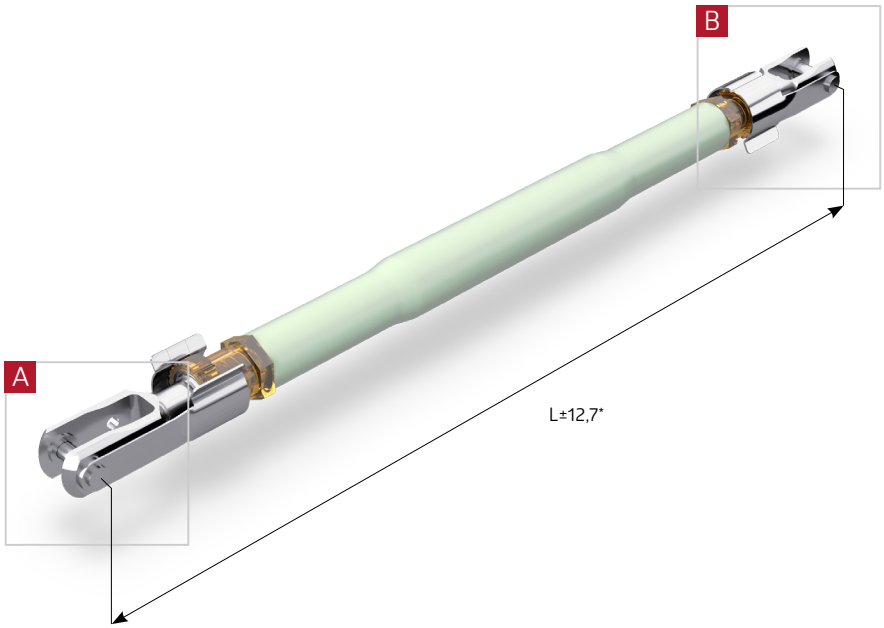

View A

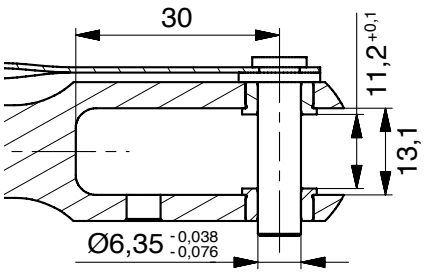

View B

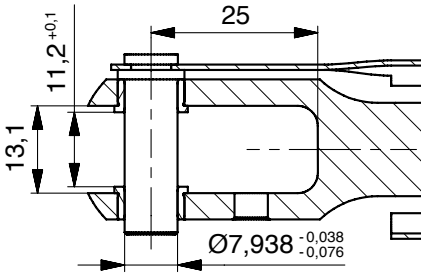

* adjustable range [mm]

ABS-no.	GMT-no.	Ultimate tension load [kN]	Ultimate compression load [kN]	Weight [g]	Rod body outer Ø [mm]	Length L [mm]	Material Rod body	Material Ends
ABS1263 A3 4000 CG	65004501	35	17	436	25,4	400	AL	CRES

TIE RODS ACC. TO ABS1263 GMT-NO. 650052..

Traceparts

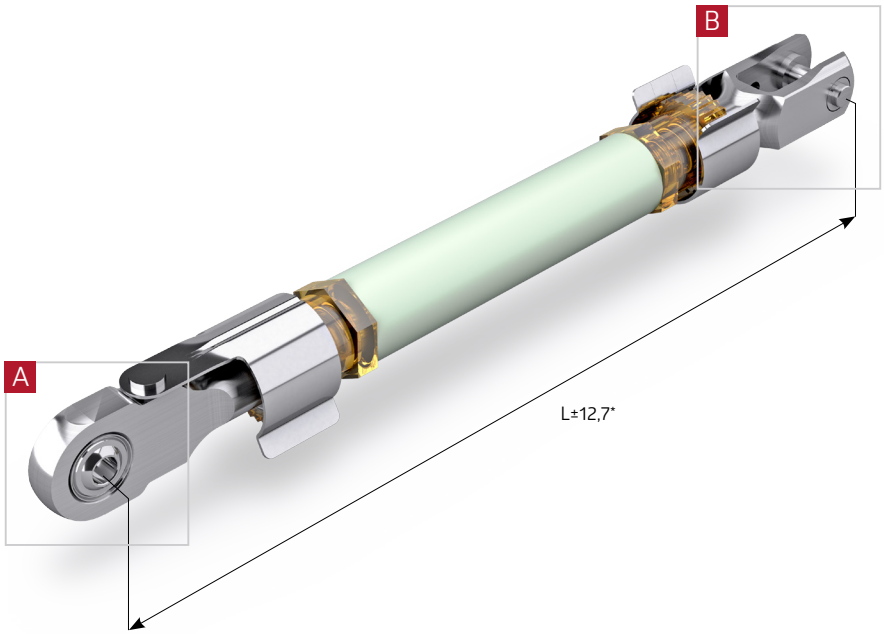

View A

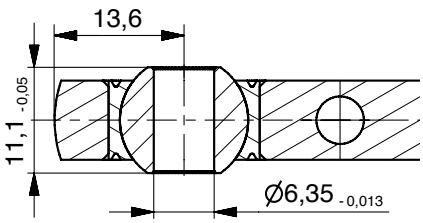

View B

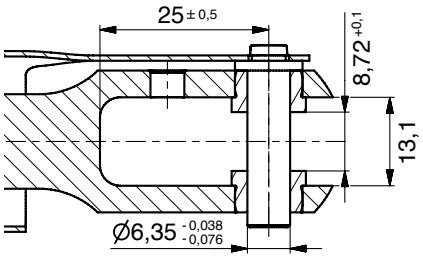

* adjustable range [mm]

ABS-no.	GMT-no.	Ultimate tension load [kN]	Ultimate compression load [kN]	Weight [g]	Rod body outer Ø [mm]	Length L [mm]	Material Rod body	Material Ends
ABS1263 B9 2400 CG	65005206	35	17	351	22,2	240	AL	CRES
ABS1263 B9 2500 CG	65005203	35	17	350	22,2	250	AL	CRES
ABS1263 B9 2796 CG	65005205	35	17	371	22,2	279,6	AL	CRES
ABS1263 B9 4000 JG	65005201	21	17	438	25,4	400	AL	CRES
ABS1263 B9 5630 TG	65005202	18	13	535	25,4	563	AL	CRES
ABS1263 B9 6000 TG	65005204	18	13	557	25,4	600	AL	CRES
ABS1263 B9 6800 CG	65005207	35	17	611	25,4	680	AL	CRES

TIE RODS ACC. TO ABS1263 GMT-NO. 650053..

Traceparts

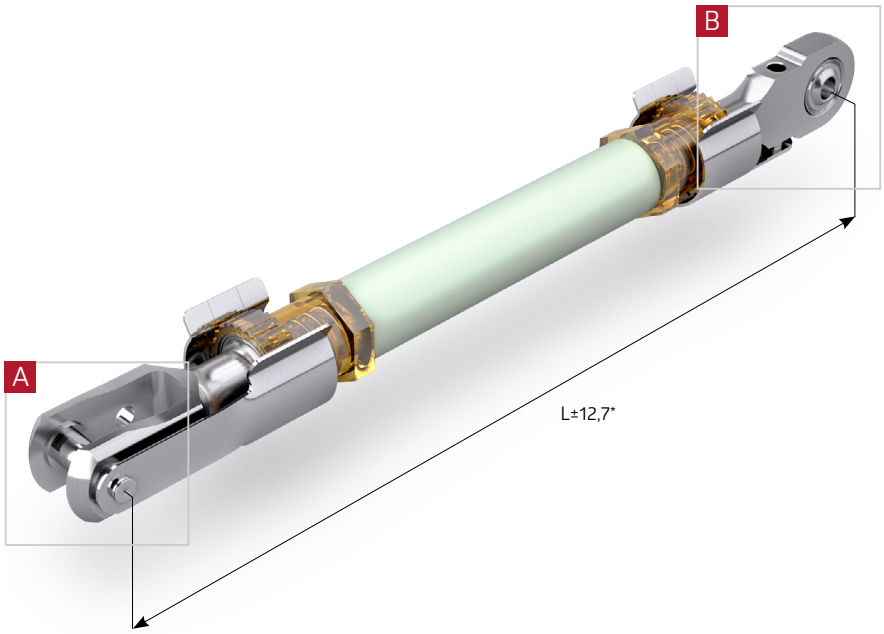

View A

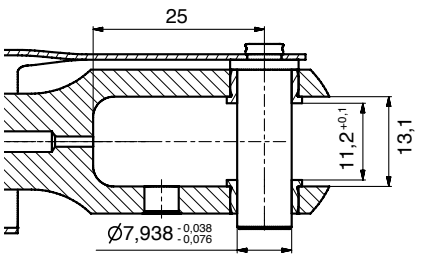

View B

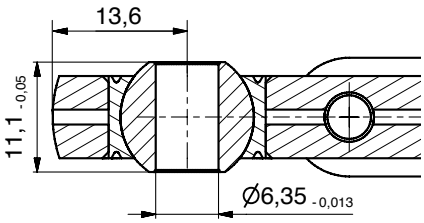

* adjustable range [mm]

ABS-no.	GMT-no.	Ultimate tension load [kN]	Ultimate compression load [kN]	Weight [g]	Rod body outer Ø [mm]	Length L [mm]	Material Rod body	Material Ends
ABS1263 C1 2400 HG	65005317	18	8	190	20	240	AL	AL
ABS1263 C1 2500 HG	65005313	18	8	186	20	250	AL	AL
ABS1263 C1 3100 VG	65005304	14	4	205	20	310	AL	AL
ABS1263 C1 3200 HG	65005309	18	8	208	20	320	AL	AL
ABS1263 C1 3500 HG	65005308	18	8	218	20	350	AL	AL
ABS1263 C1 3800 HG	65005314	18	8	227	20	380	AL	AL
ABS1263 C1 4000 AG	65005301	8	1,6	233	20	400	AL	AL
ABS1263 C1 4000 HG	65005306	18	8	233	20	400	AL	AL
ABS1263 C1 4010 VG	65005303	14	4	233	20	401	AL	AL
ABS1263 C1 4100 HG	65005311	18	8	237	20	410	AL	AL
ABS1263 C1 4140 HG	65005315	18	8	238	20	414	AL	AL
ABS1263 C1 4150 HG	65005312	18	8	238	20	415	AL	AL
ABS1263 C1 4400 HG	65005319	18	8	253	20	440	AL	AL
ABS1263 C1 4500 HG	65005307	18	8	249	20	450	AL	AL
ABS1263 C1 4500 AG	65005302	8	1,6	248	20	450	AL	AL
ABS1263 C1 4900 VG	65005305	14	4	262	20	490	AL	AL
ABS1263 C1 5000 HG	65005310	18	8	265	20	500	AL	AL
ABS1263 C1 7000 VG	65005316	14	4	336	20	700	AL	AL
ABS1263 C1 8200 VG	65005318	14	4	375	20	820	AL	AL

TIE RODS ACC. TO ABS1263 GMT-NO. 650061..

Traceparts

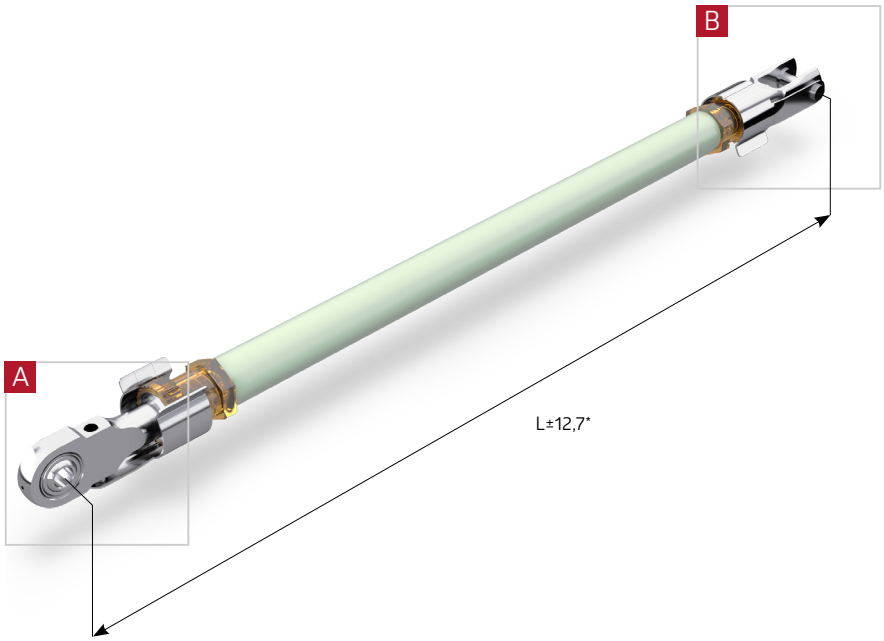

View A

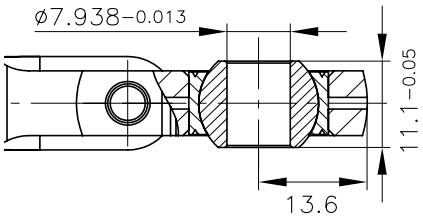

View B

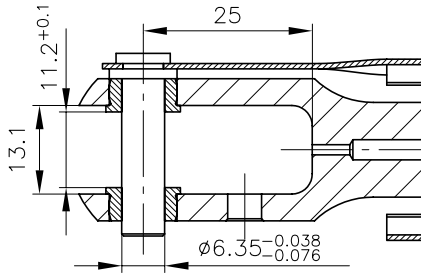

* adjustable range [mm]

ABS-no.	GMT-no.	Ultimate tension load [kN]	Ultimate compression load [kN]	Weight [g]	Rod body outer Ø [mm]	Length L [mm]	Material Rod body	Material Ends
ABS1263 C5 4310 VG	65006101	14	4	241	20	431	AL	AL
ABS1263 C5 4500 VG	65006102	14	4	247	20	450	AL	AL

TIE RODS ACC. TO ABS1263 GMT-NO. 650080..

Traceparts

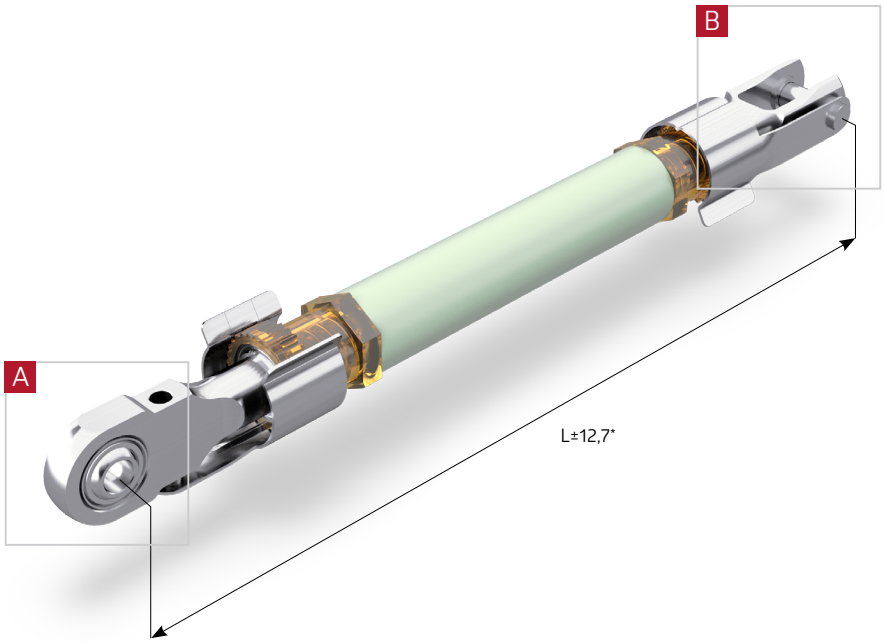

View A

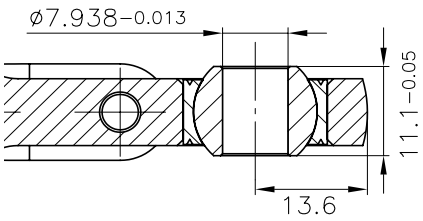

View B

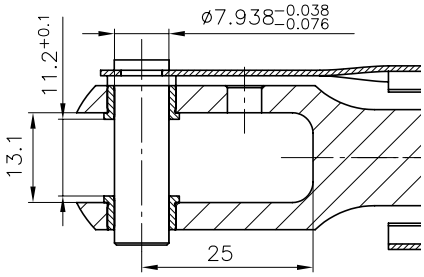

* adjustable range [mm]

ABS-no.	GMT-no.	Ultimate tension load [kN]	Ultimate compression load [kN]	Weight [g]	Rod body outer Ø [mm]	Length L [mm]	Material Rod body	Material Ends
ABS1263 C7 2500 KG	65008006	42	20	350	22,2	250	AL	CRES
ABS1263 C7 3000 KG	65008009	42	20	375	22,2	300	AL	CRES
ABS1263 C7 3200 KG	65008004	42	20	391	25,4	320	AL	CRES
ABS1263 C7 3310 KG	65008005	42	20	397	25,4	331	AL	CRES
ABS1263 C7 3400 KG	65008003	42	20	403	25,4	340	AL	CRES
ABS1263 C7 3700 KG	65008002	42	20	420	25,4	370	AL	CRES
ABS1263 C7 3766 KG	65008011	42	20	430	25,4	376,6	AL	CRES
ABS1263 C7 4000 KG	65008001	42	20	439	25,4	400	AL	CRES
ABS1263 C7 4120 VG	65008007	14	4	380	20	412	AL	CRES
ABS1263 C7 4120 KG	65008012	42	20	452	25,4	412	AL	CRES
ABS1263 C7 4300 KG	65008010	42	20	456	25,4	430	AL	CRES
ABS1263 C7 4500 KG	65008008	42	20	468	25,4	450	AL	CRES

TIE RODS ACC. TO ABS1263 GMT-NO. 650085..

Traceparts

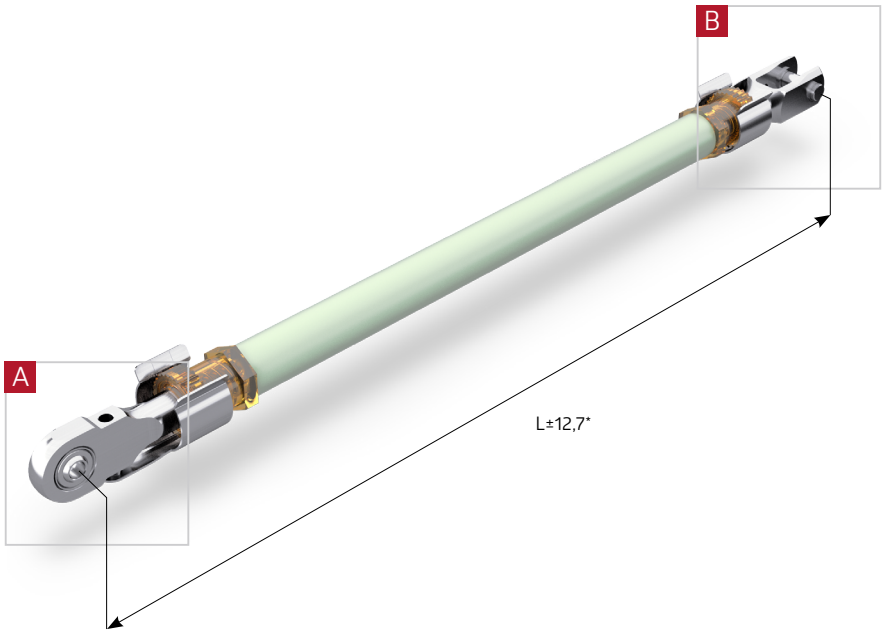

View A

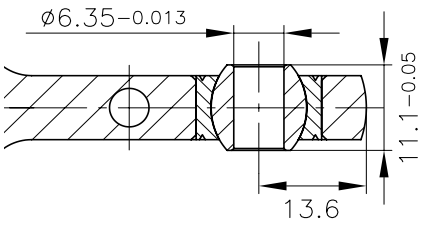

View B

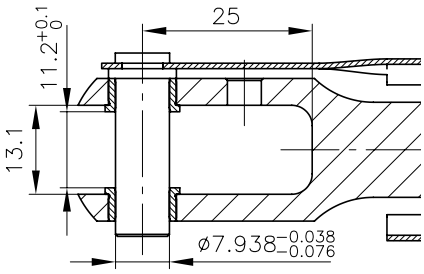

* adjustable range [mm]

ABS-no.	GMT-no.	Ultimate tension load [kN]	Ultimate compression load [kN]	Weight [g]	Rod body outer Ø [mm]	Length L [mm]	Material Rod body	Material Ends
ABS1263 C9 3500 TG	65008502	18	13	362	20	350	AL	CRES
ABS1263 C9 4000 TG	65008501	18	13	378	20	400	AL	CRES

TIE RODS ACC. TO ABS1263 GMT-NO. 65009501

Traceparts

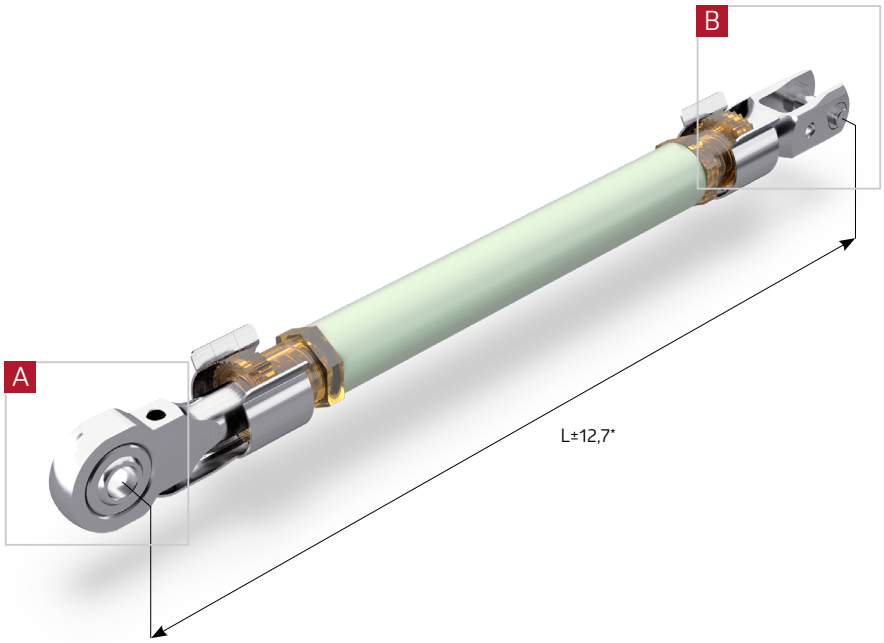

View A

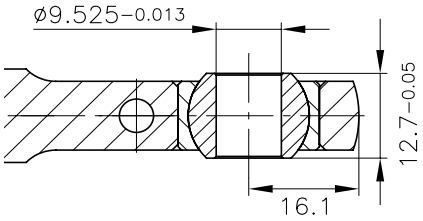

View B

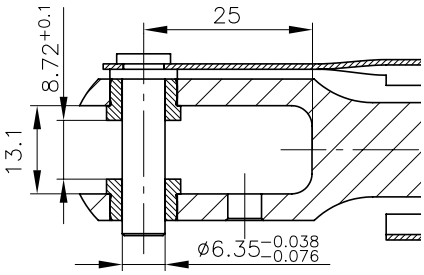

* adjustable range [mm]

ABS-no.	GMT-no.	Ultimate tension load [kN]	Ultimate compression load [kN]	Weight [g]	Rod body outer Ø [mm]	Length L [mm]	Material Rod body	Material Ends
ABS1263 C6 3000 CG	65009501	35	17	398	22,2	300	AL	CRES

TIE RODS ACC. TO ABS1263 GMT-NO. 650102..

Traceparts

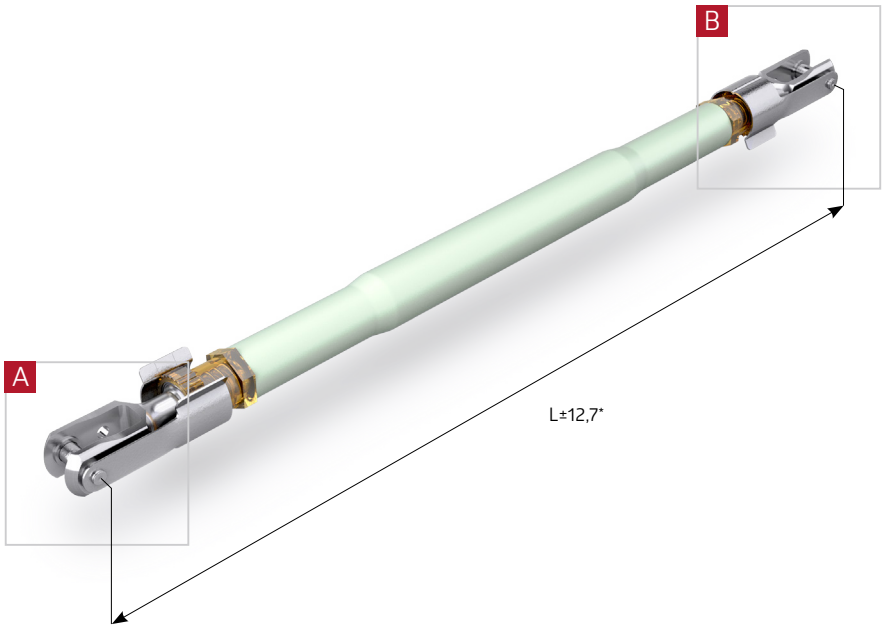

View A

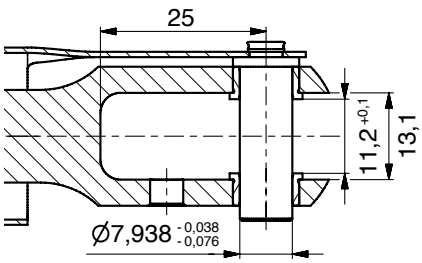

View B

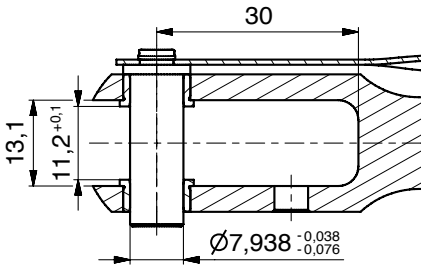

* adjustable range [mm]

ABS-no.	GMT-no.	Ultimate tension load [kN]	Ultimate compression load [kN]	Weight [g]	Rod body outer Ø [mm]	Length L [mm]	Material Rod body	Material Ends
ABS1263 A4 2400 CG	65010217	35	17	351	22,2	240	AL	CRES
ABS1263 A4 2800 CG	65010202	35	17	371	22,2	280	AL	CRES
ABS1263 A4 3900 CG	65010203	35	17	438	25,4	390	AL	CRES
ABS1263 A4 4000 CG	65010201	35	17	438	25,4	400	AL	CRES
ABS1263 A4 4300 CG	65010204	35	17	462	25,4	430	AL	CRES
ABS1263 A4 4400 CG	65010205	35	17	468	25,4	440	AL	CRES
ABS1263 A4 4500 CG	65010206	35	17	474	25,4	450	AL	CRES
ABS1263 A4 4600 CG	65010207	35	17	480	25,4	460	AL	CRES
ABS1263 A4 4700 CG	65010208	35	17	486	25,4	470	AL	CRES
ABS1263 A4 4800 CG	65010216	35	17	492	25,4	480	AL	CRES
ABS1263 A4 4900 CG	65010209	35	17	498	25,4	490	AL	CRES
ABS1263 A4 5000 CG	65010210	35	17	504	25,4	500	AL	CRES
ABS1263 A4 5100 CG	65010211	35	17	510	25,4	510	AL	CRES
ABS1263 A4 5200 CG	65010212	35	17	516	25,4	520	AL	CRES
ABS1263 A4 5300 CG	65010213	35	17	522	25,4	530	AL	CRES
ABS1263 A4 5400 CG	65010214	35	17	528	25,4	540	AL	CRES
ABS1263 A4 6000 CG	65010215	35	17	563	25,4	600	AL	CRES
ABS1263 A4 6700 CG	65010218	35	17	605	25,4	670	AL	CRES

TIE RODS ACC. TO ABS1263 GMT-NO. 650115..

Traceparts

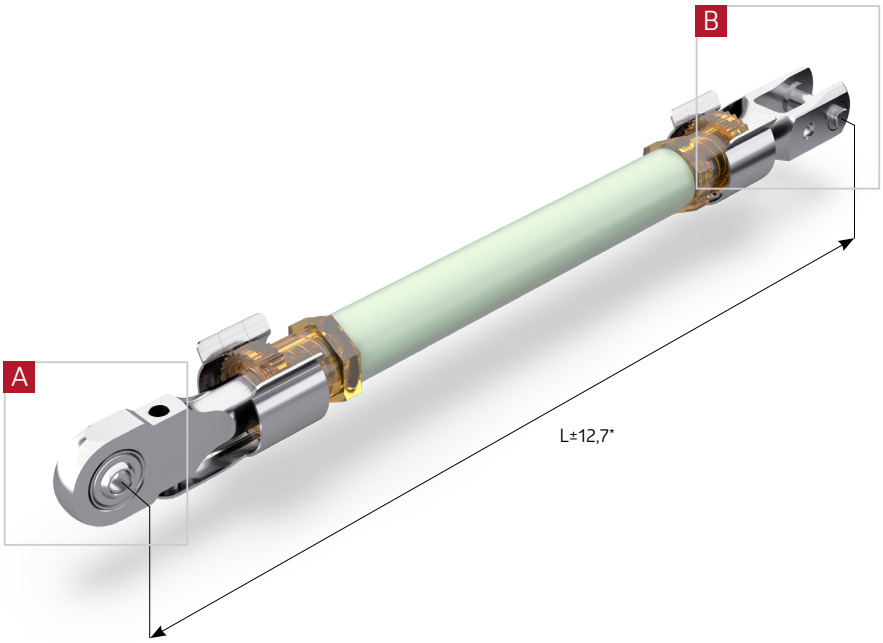

View A

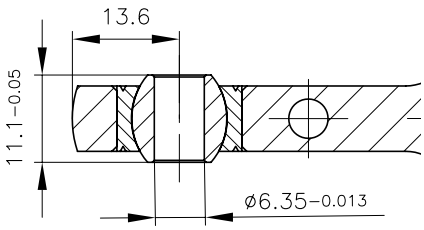

View B

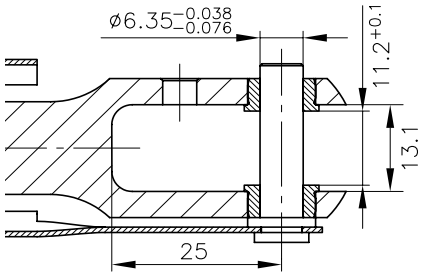

* adjustable range [mm]

ABS-no.	GMT-no.	Ultimate tension load [kN]	Ultimate compression load [kN]	Weight [g]	Rod body outer Ø [mm]	Length L [mm]	Material Rod body	Material Ends
ABS1263 D1 2796 TG	65011502	18	13	337	20	279,6	AL	CRES
ABS1263 D1 2796 DG	65011503	18	16,5	337	20	279,6	AL	CRES
ABS1263 D1 3840 TG	65011501	18	13	370	20	384	AL	CRES

TIE RODS ACC. TO ABS1263 GMT-NO. 650116..

Traceparts

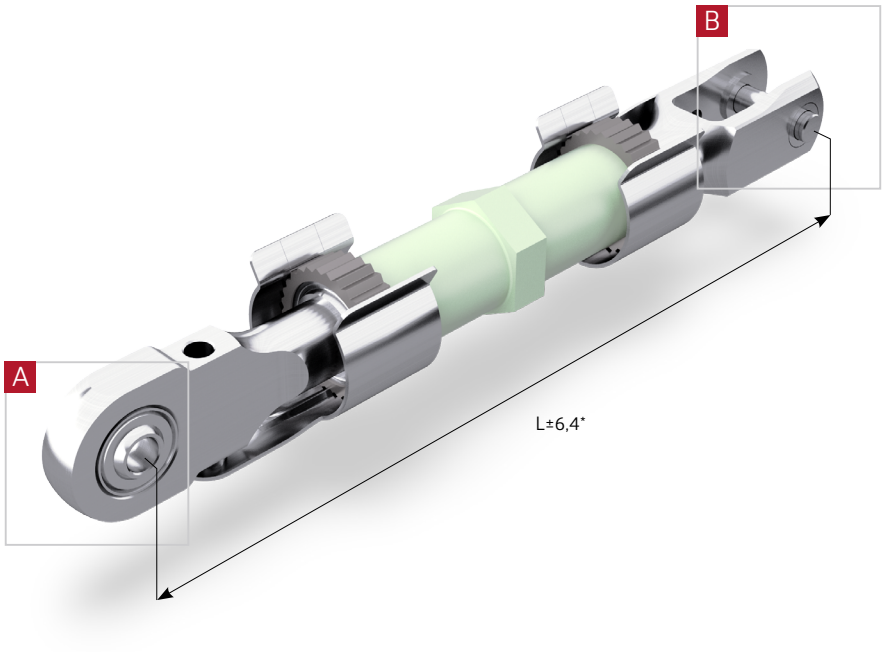

View A

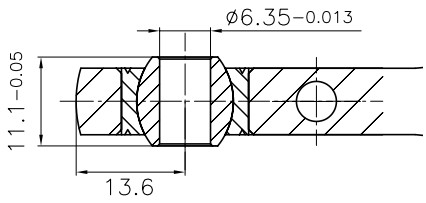

View B

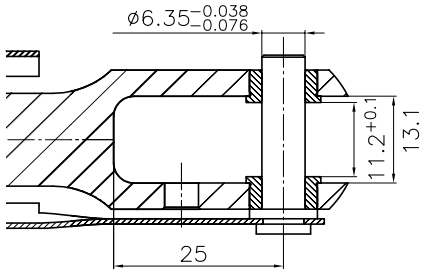

* adjustable range [mm]

ABS-no.	GMT-no.	Ultimate tension load [kN]	Ultimate compression load [kN]	Weight [g]	Rod body outer Ø [mm]	Length L [mm]	Material Rod body	Material Ends	Material threaded insert
ABS1263 D2 1675 TG	65011601	18	13	275	20	167,5	AL	CRES	Titan
ABS1263 D2 1799 TG	65011602	18	13	278	20	179,9	AL	CRES	Titan
ABS1263 D2 1814 TG	65011603	18	13	279	20	181,4	AL	CRES	Titan
ABS1263 D2 1850 DG	65011607	18	16,5	280	20	185	AL	CRES	Titan
ABS1263 D2 1880 DG	65011608	18	16,5	281	20	188	AL	CRES	Titan
ABS1263 D2 1916 TG	65011604	18	13	282	20	191,6	AL	CRES	Titan
ABS1263 D2 2004 TG	65011605	18	13	285	20	200,4	AL	CRES	Titan
ABS1263 D2 2164 TG	65011606	18	13	290	20	216,4	AL	CRES	Titan
ABS1263 D2 2370 DG	65011616	18	16,5	297	20	237	AL	CRES	Titan
ABS1263 D2 2620 FG	65011609	18	11	305	20	262	AL	CRES	Titan
ABS1263 D2 2660 FG	65011610	18	11	306	20	266	AL	CRES	Titan
ABS1263 D2 2750 FG	65011611	18	11	309	20	275	AL	CRES	Titan
ABS1263 D2 2900 FG	65011620	18	11	321	20	290	AL	CRES	Titan
ABS1263 D2 2950 FG	65011617	18	11	322	20	295	AL	CRES	Titan
ABS1263 D2 3030 FG	65011619	18	11	326	20	303	AL	CRES	Titan
ABS1263 D2 3260 FG	65011618	18	11	333	20	326	AL	CRES	Titan
ABS1263 D2 3400 FG	65011612	18	11	337	20	340	AL	CRES	Titan
ABS1263 D2 3600 FG	65011613	18	11	344	20	360	AL	CRES	Titan
ABS1263 D2 3600 DG	65011624	18	16,5	344	20	360	AL	CRES	Titan
ABS1263 D2 3800 FG	65011614	18	11	350	20	380	AL	CRES	Titan
ABS1263 D2 3844 FG	65011622	18	11	351	20	384,4	AL	CRES	Titan
ABS1263 D2 4000 FG	65011621	18	11	356	20	400	AL	CRES	Titan
ABS1263 D2 4067 FG	65011623	18	11	359	20	406,7	AL	CRES	Titan
ABS1263 D2 4220 FG	65011615	18	11	363	20	422	AL	CRES	Titan
ABS1263 D2 4256 FG	65011626	18	11	359	20	425,6	AL	CRES	Titan

TIE RODS ACC. TO ABS1263 GMT-NO. 650122..

Traceparts

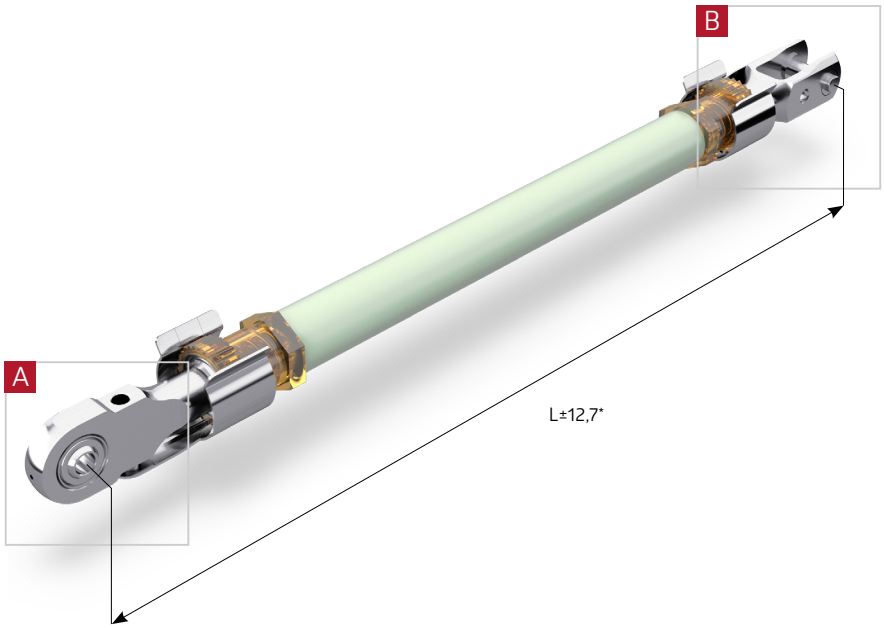

View A

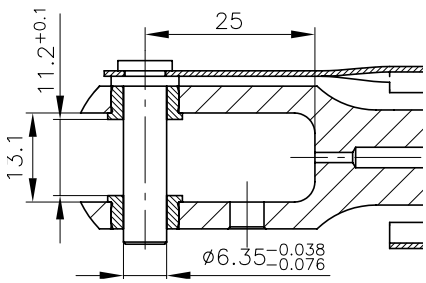

View B

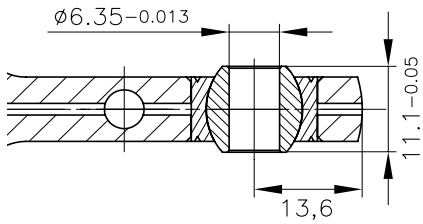

* adjustable range [mm]

ABS-no.	GMT-no.	Ultimate tension load [kN]	Ultimate compression load [kN]	Weight [g]	Rod body outer Ø [mm]	Length L [mm]	Material Rod body	Material Ends
ABS1263 D4 3250 LG	65012202	18	9	206	20	325	AL	AL
ABS1263 D4 3390 LG	65012203	18	9	211	20	339	AL	AL
ABS1263 D4 3560 LG	65012204	18	9	216	20	356	AL	AL
ABS1263 D4 6500 LG	65012205	18	9	449	20	650	AL	AL

TIE RODS ACC. TO ABS1263 GMT-NO. 65012601

Traceparts

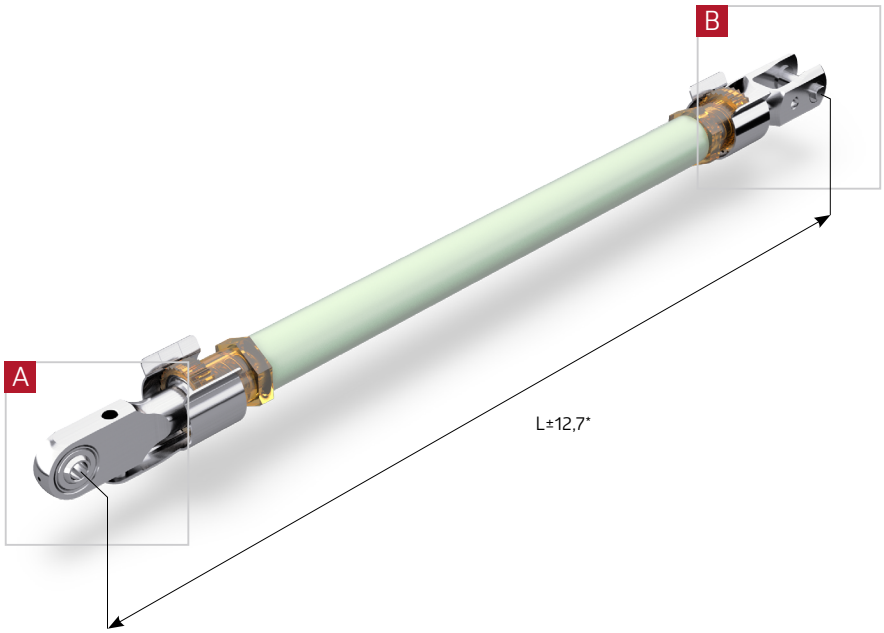

View A

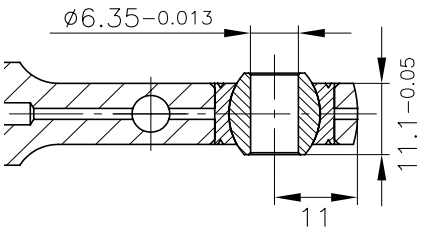

View B

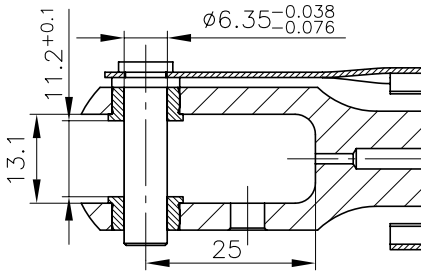

* adjustable range [mm]

ABS-no.	GMT-no.	Ultimate tension load [kN]	Ultimate compression load [kN]	Weight [g]	Rod body outer Ø [mm]	Length L [mm]	Material Rod body	Material Ends
ABS1263 D3 3700 EG	65012601	10	6,25	219	20	370	AL	AL

TIE RODS ACC. TO ABS1263 GMT-NO. 65017901, 65019901

Traceparts

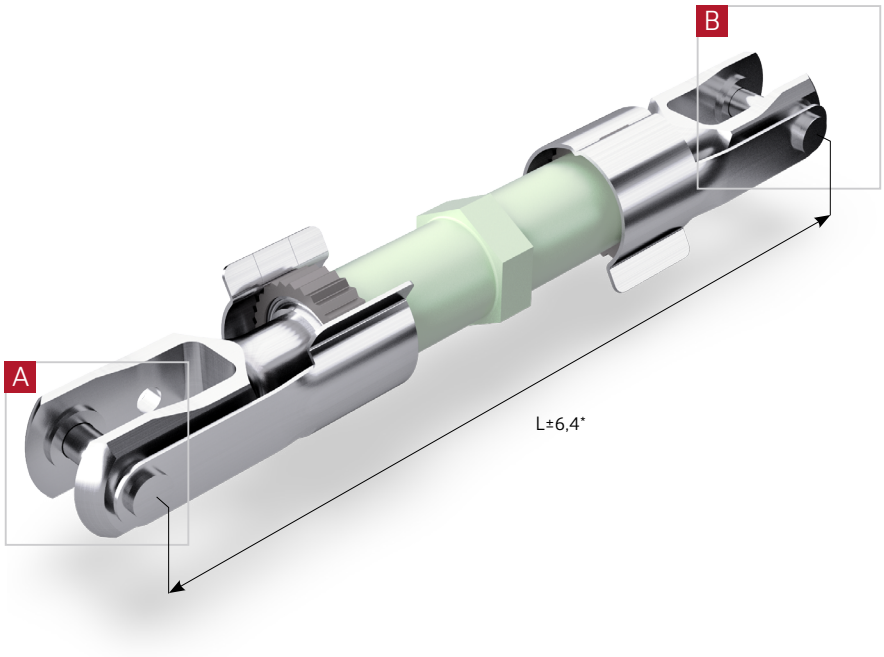

View A

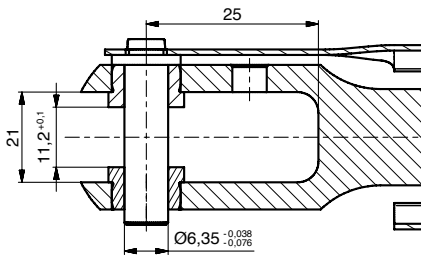

View B

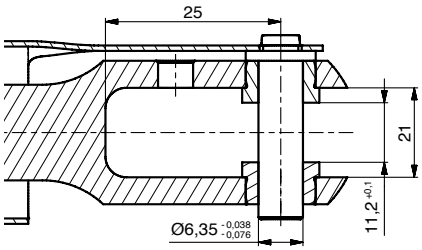

* adjustable range [mm]

ABS-no.	GMT-no.	Ultimate tension load [kN]	Ultimate compression load [kN]	Weight [g]	Rod body outer Ø [mm]	Length L [mm]	Material Rod body	Material Ends	Material threaded insert
ABS1263 A6 1700 VG	65017901	14	4	269	20	170	AL	CRES	Titan
ABS1263 A6 1700 WG	65019901	14	4	263	20	170	AL	CRES	Titan

TIE RODS ACC. TO ABS1263 GMT-NO. 65018201

Traceparts

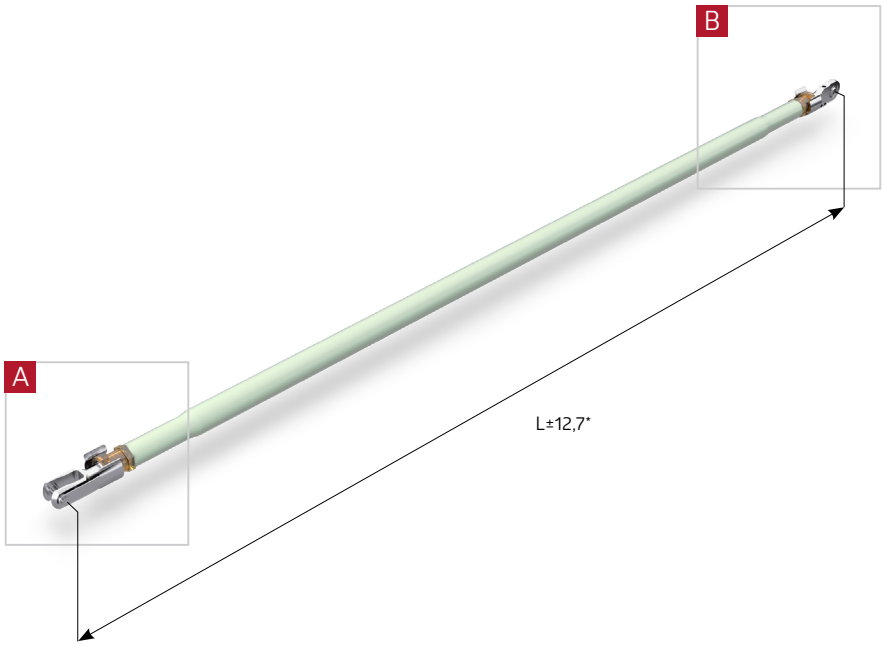

View A

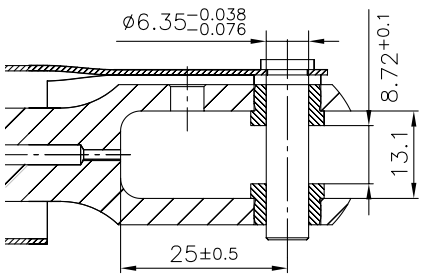

View B

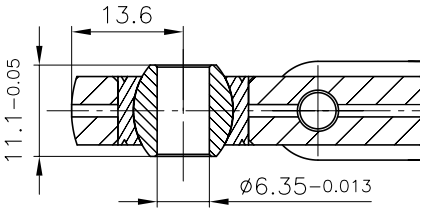

* adjustable range [mm]

ABS-no.	GMT-no.	Ultimate tension load [kN]	Ultimate compression load [kN]	Weight [g]	Rod body outer Ø [mm]	Length L [mm]	Material Rod body	Material Ends
ABS1263 E1 B000 BG	65018201	18	3	710	25,4	1100	AL	AL

TIE RODS ACC. TO ABS1263 GMT-NO. 650198.., 650178..

Traceparts

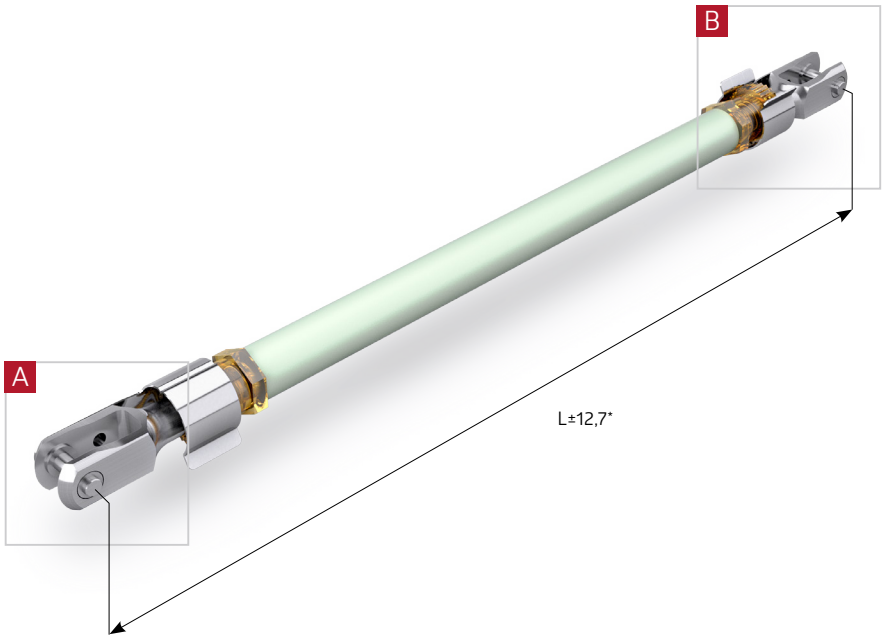

View A

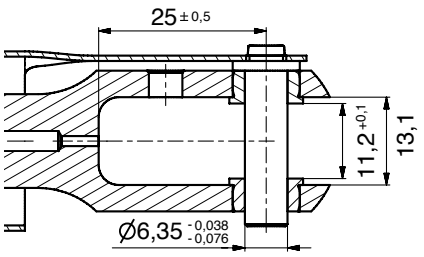

View B

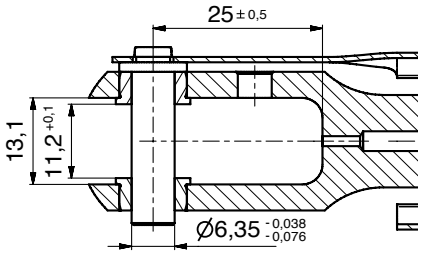

* adjustable range [mm]

ABS-no.	GMT-no.	Ultimate tension load [kN]	Ultimate compression load [kN]	Weight [g]	Rod body outer Ø [mm]	Length L [mm]	Material Rod body	Material Ends
ABS1263 A5 2350 PG	65019810	18	5	181	20	235	AL	AL
ABS1263 A5 2350 VG	65017801	14	4	174	20	235	AL	AL
ABS1263 A5 2350 WG	65019801	14	4	174	20	235	AL	AL
ABS1263 A5 2600 VG	65017802	14	4	182	20	235	AL	AL
ABS1263 A5 2600 WG	65019802	14	4	182	20	260	AL	AL
ABS1263 A5 4000 PG	65019809	18	5	234	20	400	AL	AL
ABS1263 A5 5200 PG	65019805	18	5	272	20	520	AL	AL
ABS1263 A5 5250 VG	65017803	14	4	267	20	235	AL	AL
ABS1263 A5 5250 WG	65019803	14	4	267	20	525	AL	AL
ABS1263 A5 5330 PG	65019806	18	5	276	20	533	AL	AL
ABS1263 A5 5550 VG	65017804	14	4	276	20	235	AL	AL
ABS1263 A5 5550 WG	65019804	14	4	276	20	555	AL	AL
ABS1263 A5 7300 PG	65019811	18	5	338,8	20	730	AL	AL

TIE RODS ACC. TO ABS1263 GMT-NO. 65021201

Traceparts

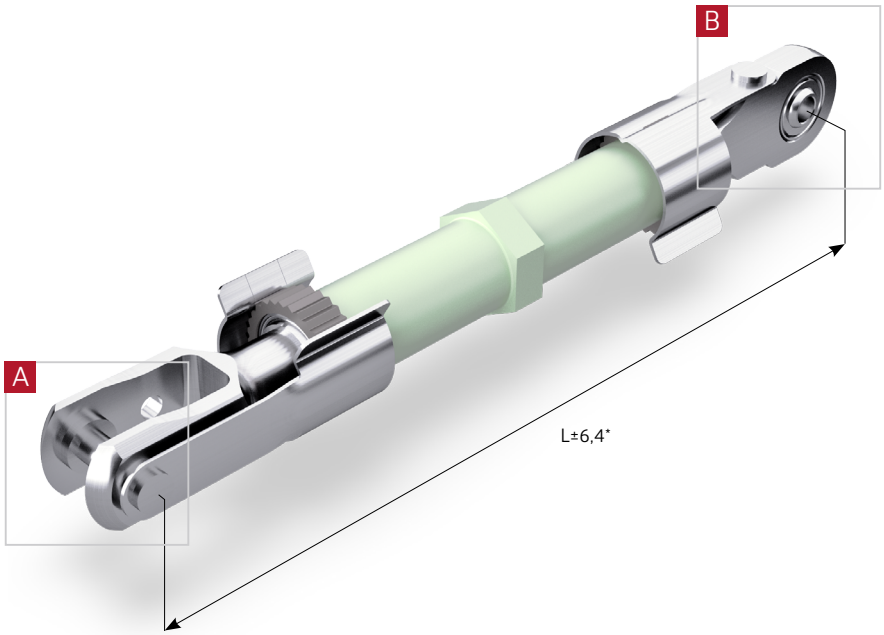

View A

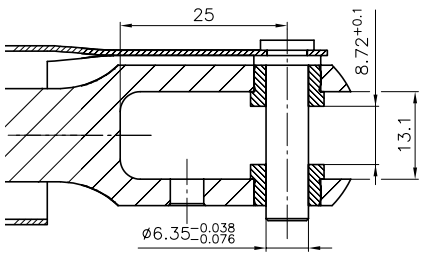

View B

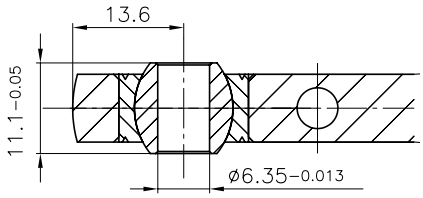

* adjustable range [mm]

ABS-no.	GMT-no.	Ultimate tension load [kN]	Ultimate compression load [kN]	Weight [g]	Rod body outer Ø [mm]	Length L [mm]	Material Rod body	Material Ends	Material threaded insert
ABS1263 D5 1966 VG	65021201	14	4	282	20	196,6	AL	CRES	Titan

TIE RODS ACC. TO ABS1263 GMT-NO. 650217..

Traceparts

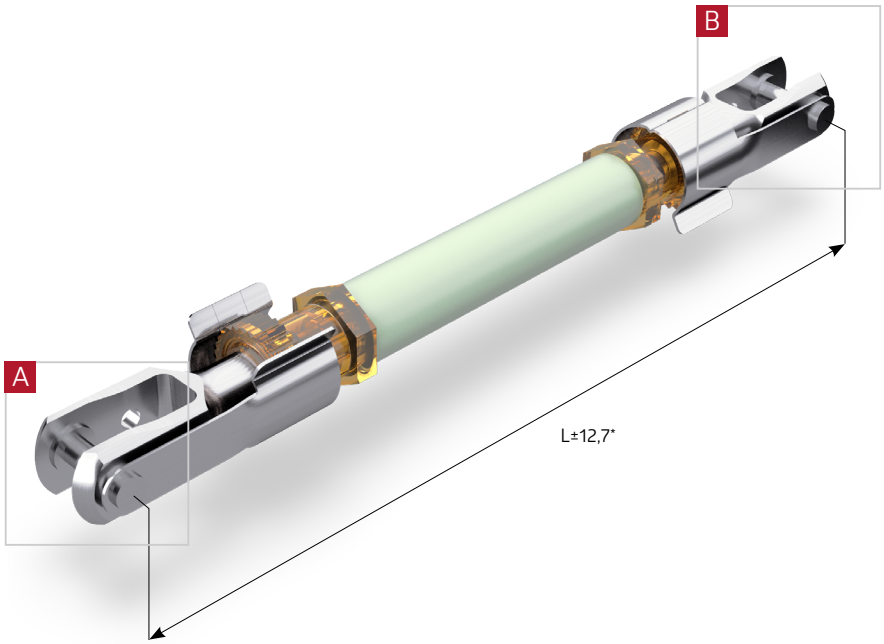

View A

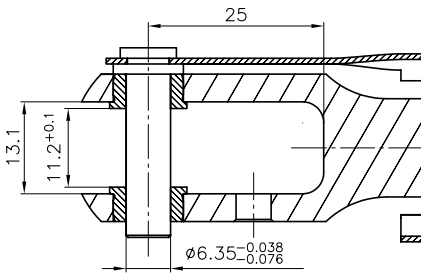

View B

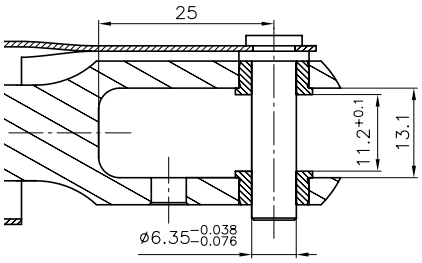

* adjustable range [mm]

ABS-no.	GMT-no.	Ultimate tension load [kN]	Ultimate compression load [kN]	Weight [g]	Rod body outer Ø [mm]	Length L [mm]	Material Rod body	Material Ends
ABS1263 A7 2350 WG	65021701	14	4	340	20	235	AL	CRES
ABS1263 A7 2600 WG	65021702	14	4	348	20	260	AL	CRES
ABS1263 A7 5250 WG	65021703	14	4	432	20	525	AL	CRES
ABS1263 A7 5550 WG	65021704	14	4	442	20	555	AL	CRES

TIE RODS ACC. TO ABS1263 GMT-NO. 65026701

Traceparts

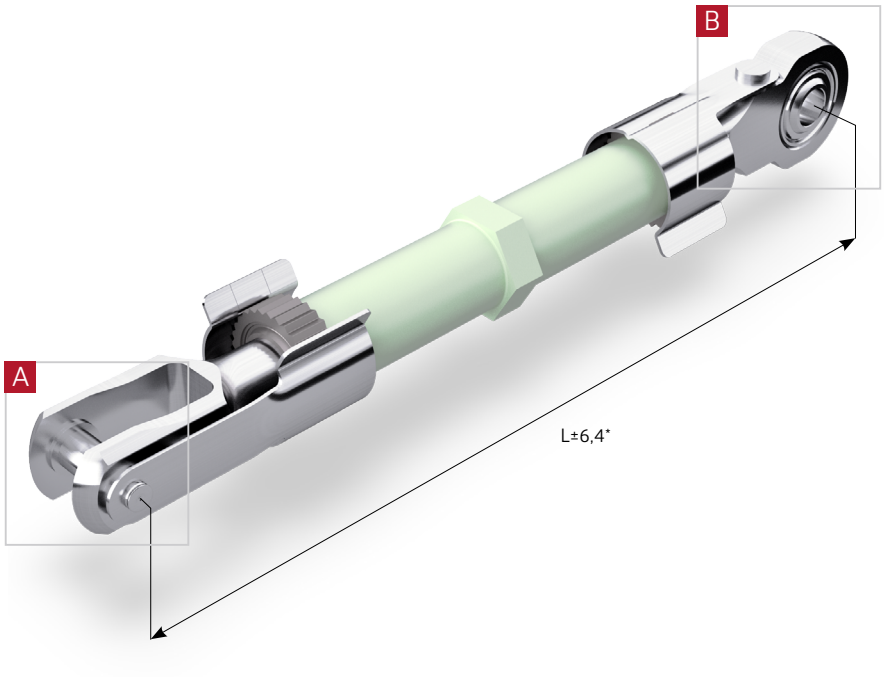

View A

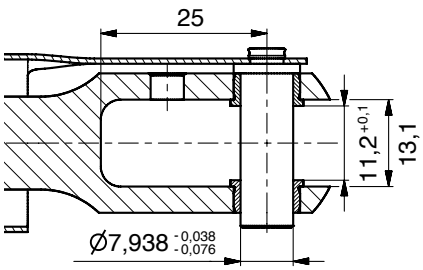

View B

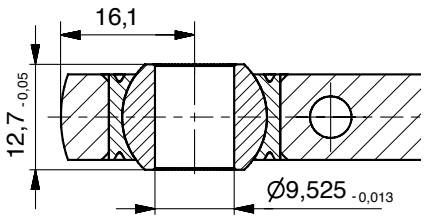

* adjustable range [mm]

ABS-no.	GMT-no.	Ultimate tension load [kN]	Ultimate compression load [kN]	Weight [g]	Rod body outer Ø [mm]	Length L [mm]	Material Rod body	Material Ends	Material threaded insert
ABS1263 D6 2050 TG	65026701	18	13	312	20	205	AL	CRES	Titan

TIE RODS ACC. TO ABS1263 GMT-NO. 65030001

Traceparts

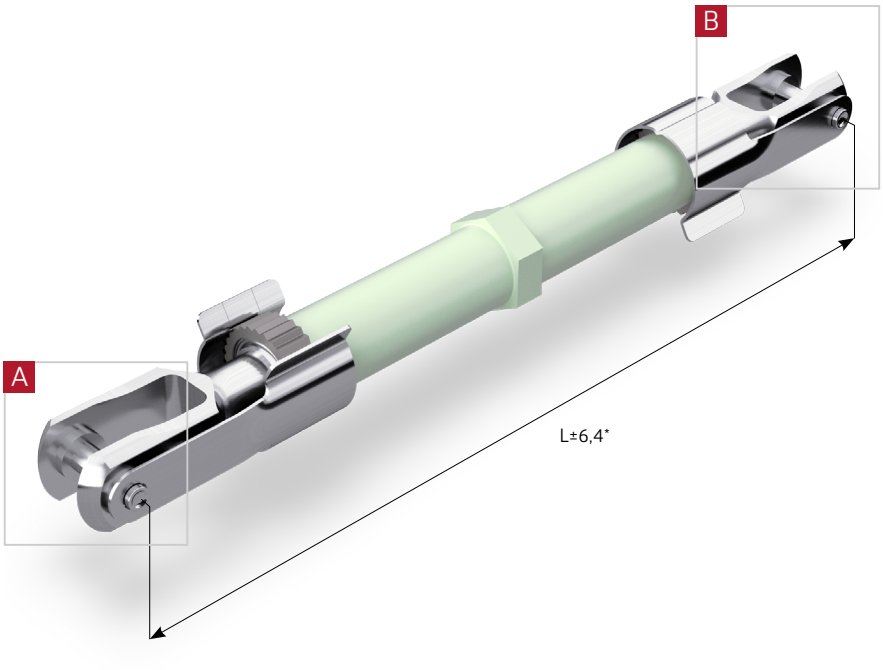

View A

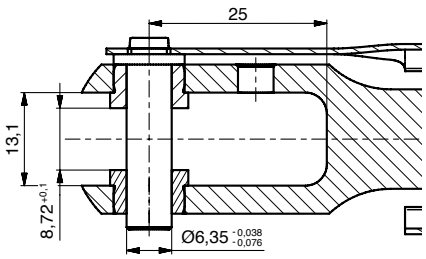

View B

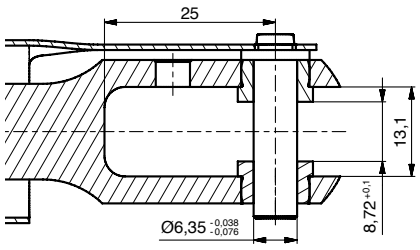

* adjustable range [mm]

ABS-no.	GMT-no.	Ultimate tension load [kN]	Ultimate compression load [kN]	Weight [g]	Rod body outer Ø [mm]	Length L [mm]	Material Rod body	Material Ends	Material threaded insert
ABS1263 A8 2270 TG	65030001	18	13	292	20	227	AL	CRES	Titan

TIE RODS ACC. TO ABS1263 GMT-NO. 65030301

Traceparts

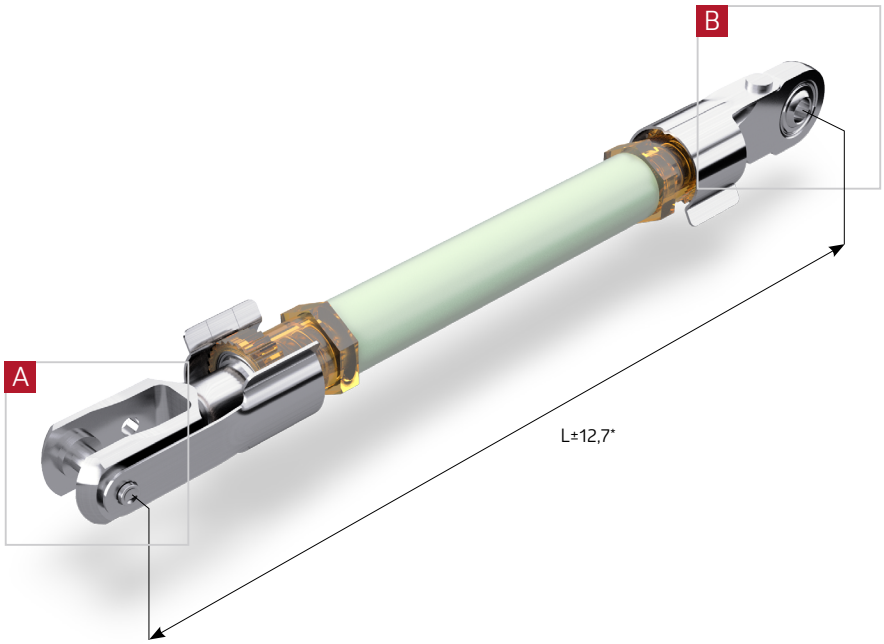

View A

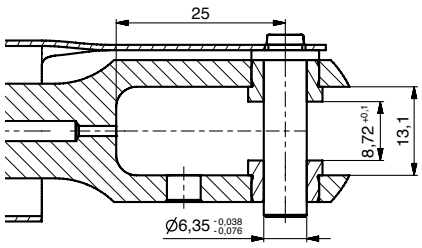

View B

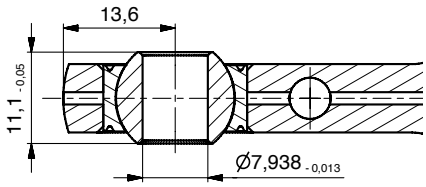

* adjustable range [mm]

ABS-no.	GMT-no.	Ultimate tension load [kN]	Ultimate compression load [kN]	Weight [g]	Rod body outer Ø [mm]	Length L [mm]	Material Rod body	Material Ends
ABS1263 D7 2580 VG	65030301	14	4	194	20	258	AL	AL

TIE RODS ACC. TO ABS1263 GMT-NO. 650304..

Traceparts

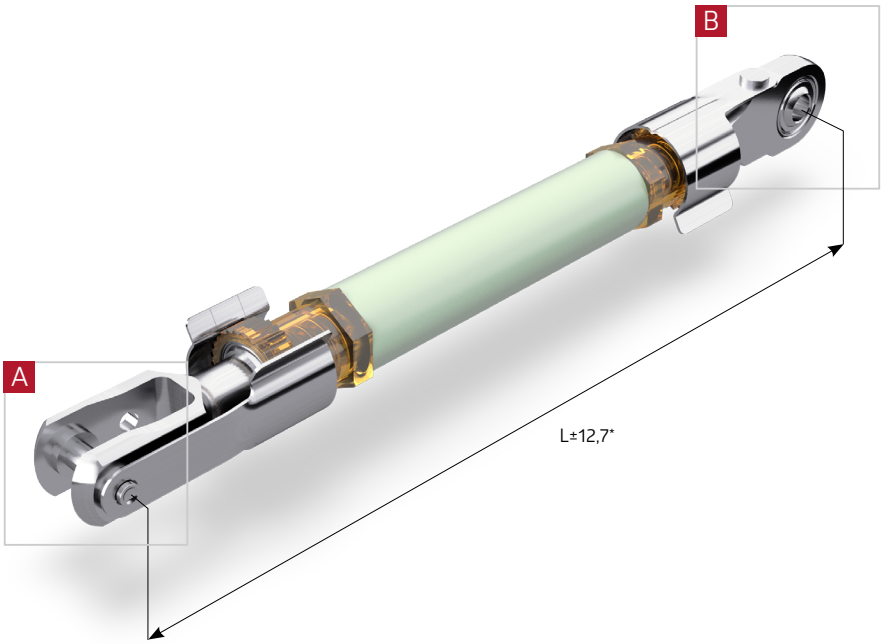

View A

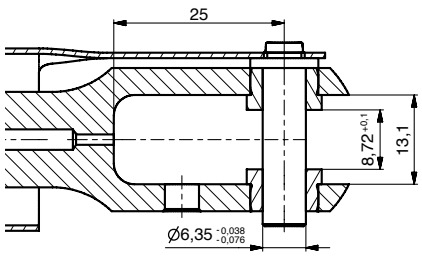

View B

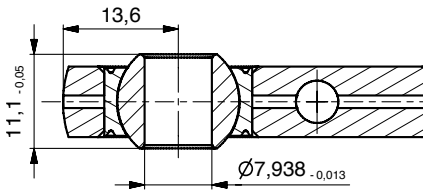

* adjustable range [mm]

ABS-no.	GMT-no.	Ultimate tension load [kN]	Ultimate compression load [kN]	Weight [g]	Rod body outer Ø [mm]	Length L [mm]	Material Rod body	Material Ends
ABS1263 E2 2400 HG	65030403	18	8	208	22,2	240	AL	AL
ABS1263 E2 3400 HG	65030402	18	8	265	25,4	340	AL	AL
ABS1263 E2 7000 HG	65030401	18	8	472	25,4	700	AL	AL
ABS1263 E2 A000 HG	65030404	18	8	658	25,4	1000	AL	AL

TIE RODS ACC. TO ABS1263 GMT-NO. 650388..

Traceparts

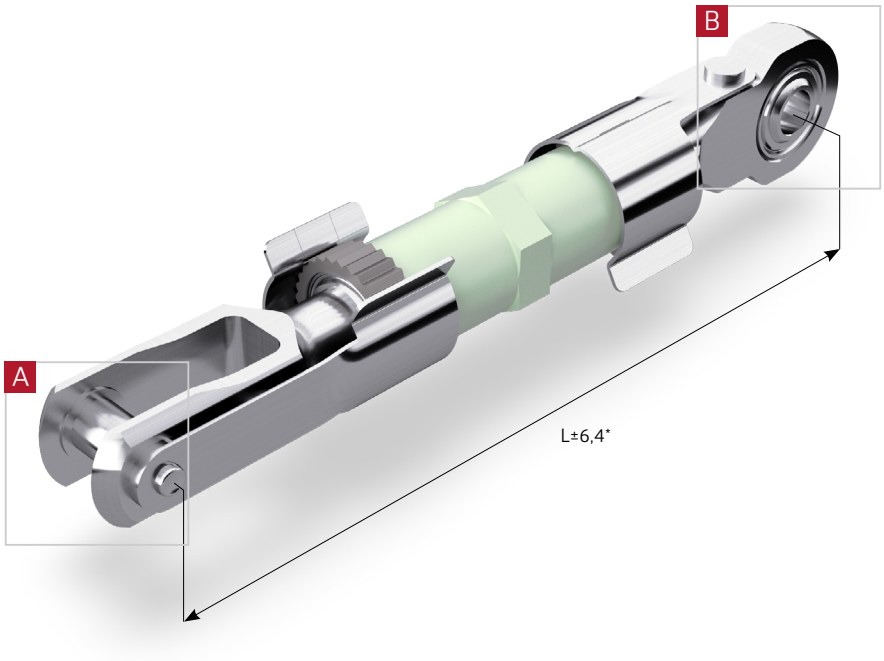

View A

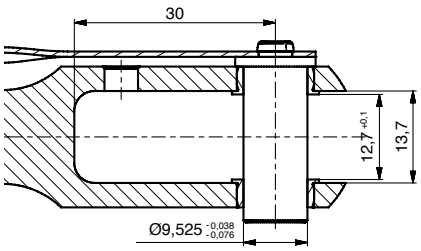

View B

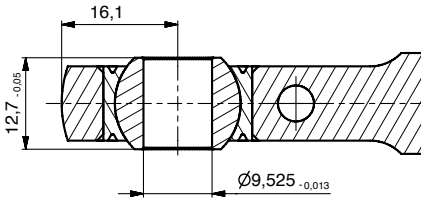

* adjustable range [mm]

ABS-no.	GMT-no.	Ultimate tension load [kN]	Ultimate compression load [kN]	Weight [g]	Rod body outer Ø [mm]	Length L [mm]	Material Rod body	Material Ends	Material threaded insert
ABS1263 D8 1650 KG	65038802	42	20	316	22,2	165	AL	CRES	Titan
ABS1263 D8 2200 KG	65038801	42	20	343	22,2	220	AL	CRES	Titan
ABS1263 D8 3500 KG	65038803	42	20	410	22,2	350	AL	CRES	Titan

TIE RODS ACC. TO ABS1263 GMT-NO. 650389..

Traceparts

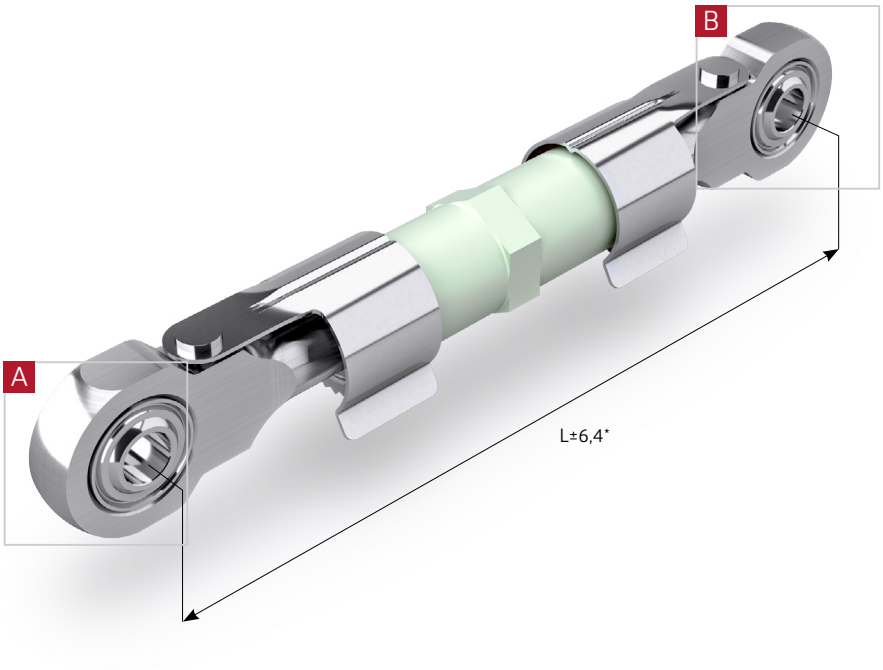

View A

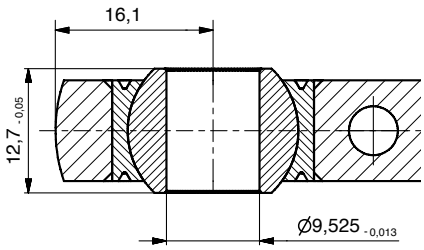

View B

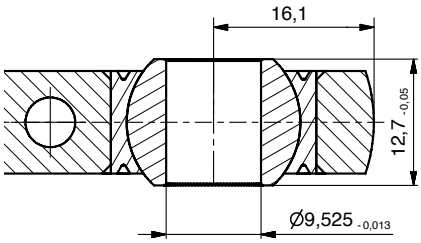

* adjustable range [mm]

ABS-no.	GMT-no.	Ultimate tension load [kN]	Ultimate compression load [kN]	Weight [g]	Rod body outer Ø [mm]	Length L [mm]	Material Rod body	Material Ends	Material threaded insert
ABS1263 K1 1650 KG	65038903	42	20	338	22,2	165	AL	CRES	Titan
ABS1263 K1 1840 KG	65038902	42	20	347	22,2	184	AL	CRES	Titan
ABS1263 K1 2200 KG	65038901	42	20	366	22,2	220	AL	CRES	Titan
ABS1263 K1 3500 KG	65038904	42	20	432	22,2	350	AL	CRES	Titan

TIE RODS ACC. TO ABS1263 GMT-NO. 65041801

Traceparts

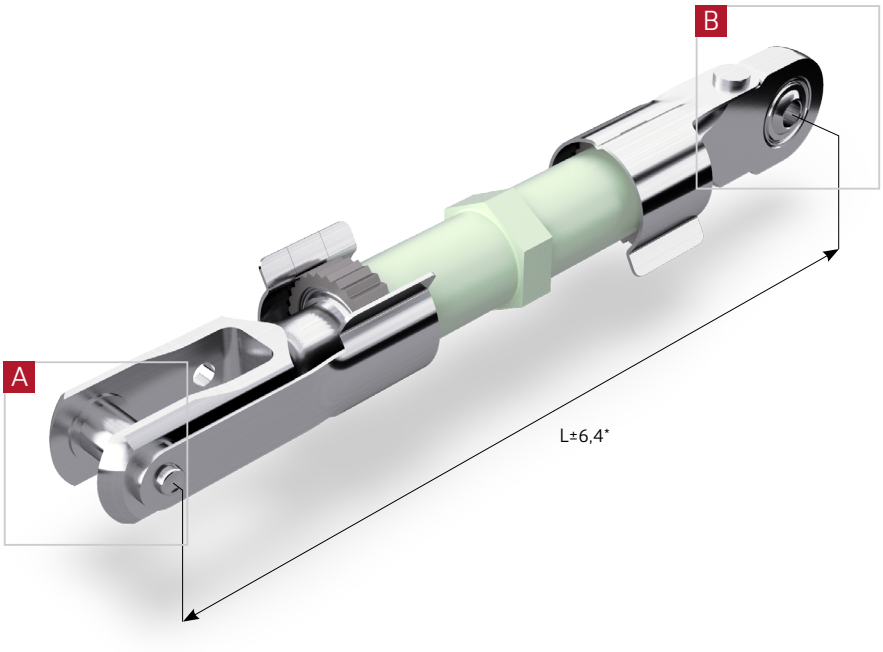

View A

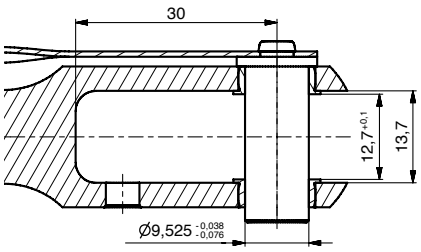

View B

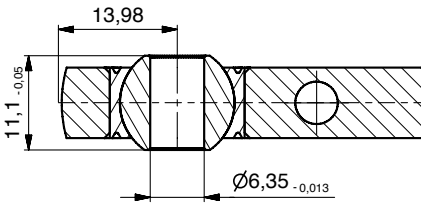

* adjustable range [mm]

ABS-no.	GMT-no.	Ultimate tension load [kN]	Ultimate compression load [kN]	Weight [g]	Rod body outer Ø [mm]	Length L [mm]	Material Rod body	Material Ends	Material threaded insert
ABS1263 M1 1800 TG	65041801	18	13	300	20	180	AL	CRES	Titan

TIE RODS ACC. TO ABS1263 GMT-NO. 650421..

Traceparts

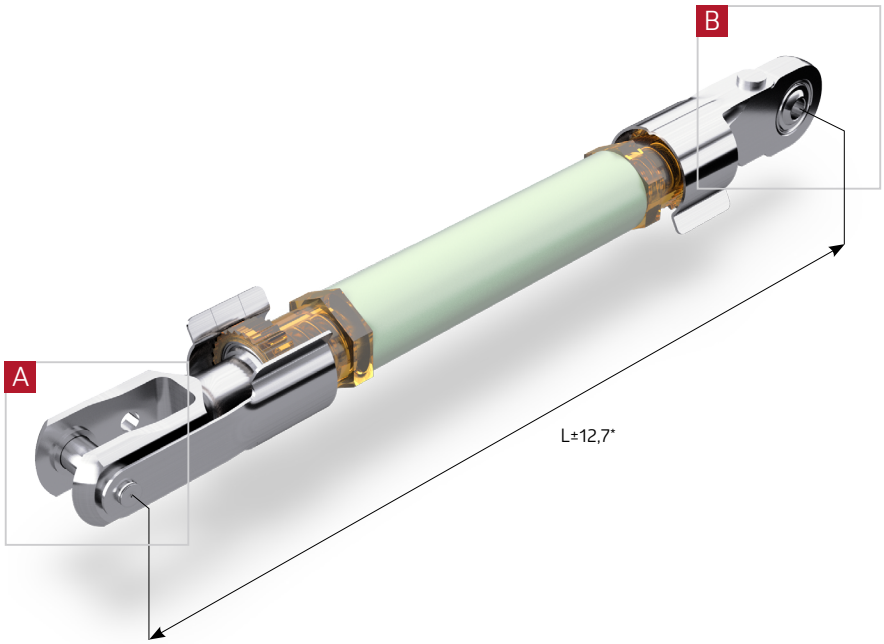

View A

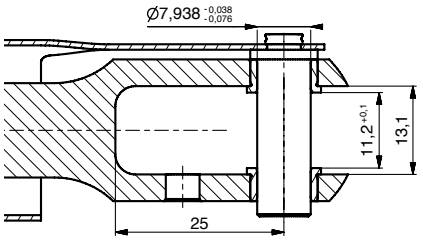

View B

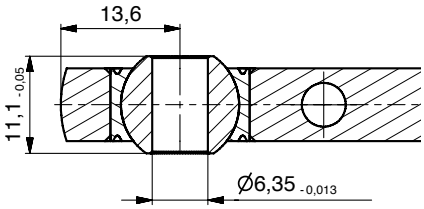

* adjustable range [mm]

ABS-no.	GMT-no.	Ultimate tension load [kN]	Ultimate compression load [kN]	Weight [g]	Rod body outer Ø [mm]	Length L [mm]	Material Rod body	Material Ends
ABS1263 D9 2400 CG	65042102	35	17	352	22,2	240	AL	CRES
ABS1263 D9 2796 CG	65042101	35	17	373	22,2	279,6	AL	CRES
ABS1263 D9 7000 CG	65042103	35	17	625	25,4	700	AL	CRES

TIE RODS ACC. TO ABS1263 GMT-NO. 650434..

Traceparts

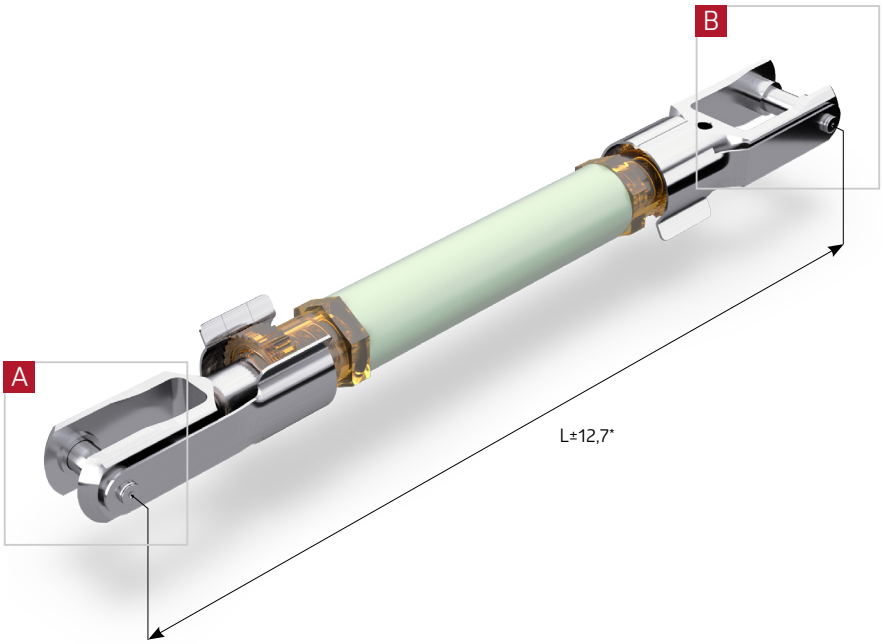

View A

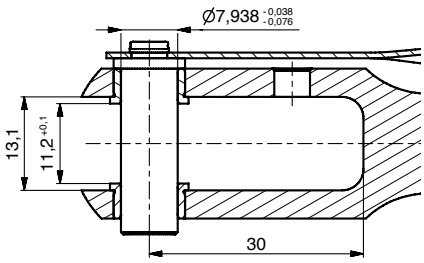

View B

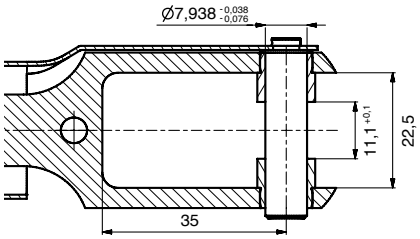

* adjustable range [mm]

ABS-no.	GMT-no.	Ultimate tension load [kN]	Ultimate compression load [kN]	Weight [g]	Rod body outer Ø [mm]	Length L [mm]	Material Rod body	Material Ends
ABS1263 L1 2600 CG	65043401	35	17	386	22,2	260	AL	CRES
ABS1263 L1 4700 CG	65043402	35	17	510	25,4	470	AL	CRES
ABS1263 L1 7000 CG	65043403	35	17	647	25,4	700	AL	CRES

TIE RODS ACC. TO ABS1263 GMT-NO. 650435..

Traceparts

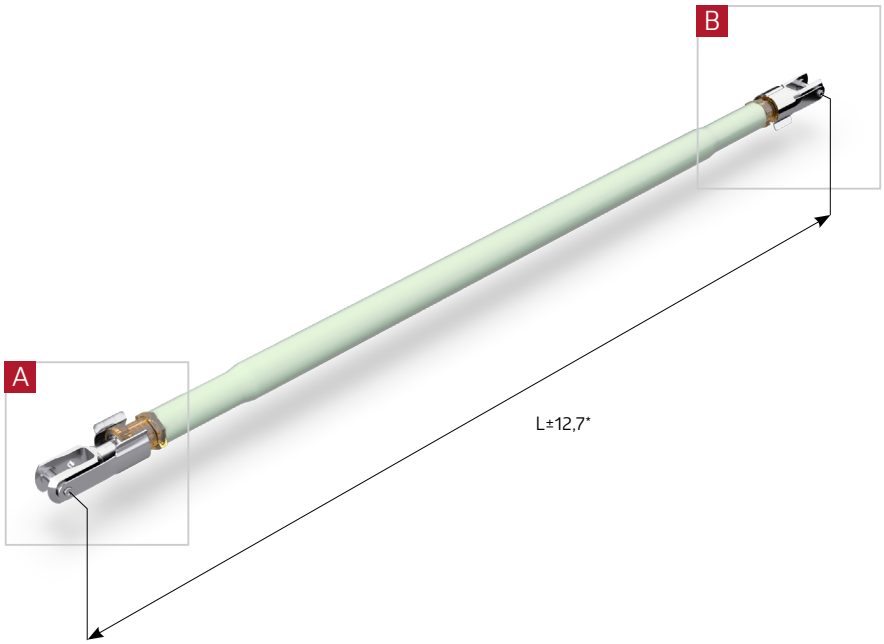

View A

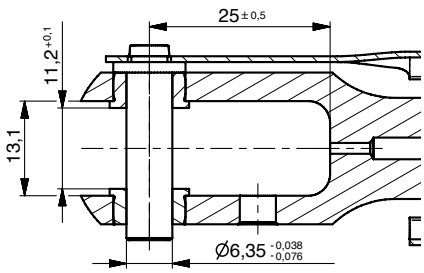

View B

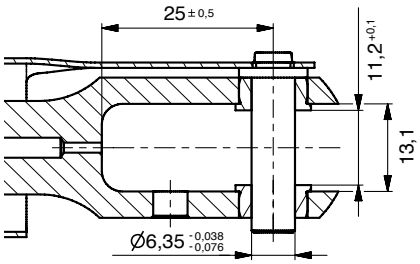

* adjustable range [mm]

ABS-no.	GMT-no.	Ultimate tension load [kN]	Ultimate compression load [kN]	Weight [g]	Rod body outer Ø [mm]	Length L [mm]	Material Rod body	Material Ends
ABS1263 F1 7350 PG	65043501	18	5	495	25,4	735	AL	AL
ABS1263 F1 B740 PG	65043502	18	5	755	25,4	1174	AL	AL
ABS1263 F1 C020 PG	65043503	18	5	772	25,4	1202	AL	AL
ABS1263 F1 C500 PG	65043504	18	5	800	25,4	1250	AL	AL

DESCRIPTION TO TIE RODS ABS1214

Mainly applicable for interior fittings and mounting of units in fuselage and cabin, also usable as structure part. Conventional locking of rod ends and fork ends with lock wire and counter nut. Is used in case there is not enough space for the locking element according to ABS1263 or if lock wire is requested.

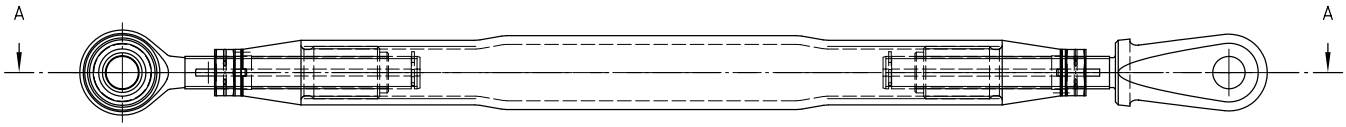

A-A

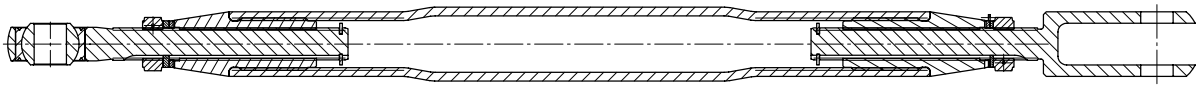

Advantage:

1. Integrated securing against hollowing avoids too far unscrew of the thread while mounting.
2. Threaded plastic inserts avoids problems with corrosion inside the thread.
3. Threaded plastic inserts assures thermic insulation between fuselage and cabin.
4. Threaded plastic inserts assures acoustic insulation between fuselage and cabin.

Designation

Description block	Identity block			
Rod Assemblies	ABS1214	A1	3500	Z

Number of this standard
Assembly code:
Size code:
Fatigue Load category:

COMPONENTS OF TIE RODS ABS1214

Components and their function

Rod end

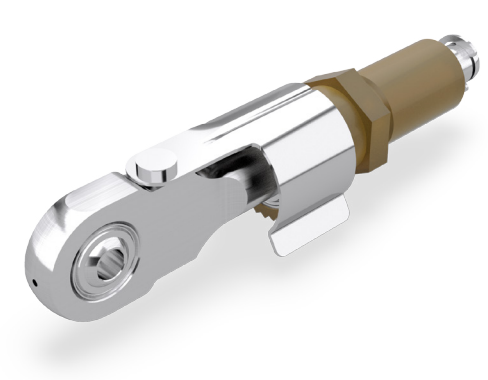

Fork end

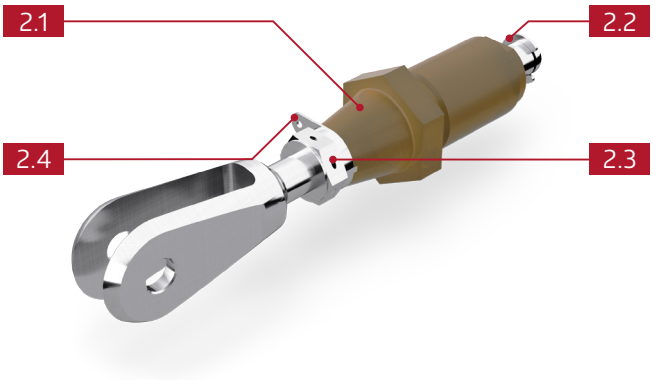

2.1

Plastic insert

Aids in transmission of loads
Plastic prevents corrosion in thread and acts as an insu-lator.

2.3

Nut

Acc. to NAS 509

2.2

Safety ring

Prevents and controls too far turning off the thread.

2.4

Locking washer

Acc. to NAS 1193

TIE RODS ACC. TO ABS1214 GMT-NO. 650030.., 650158..

Traceparts

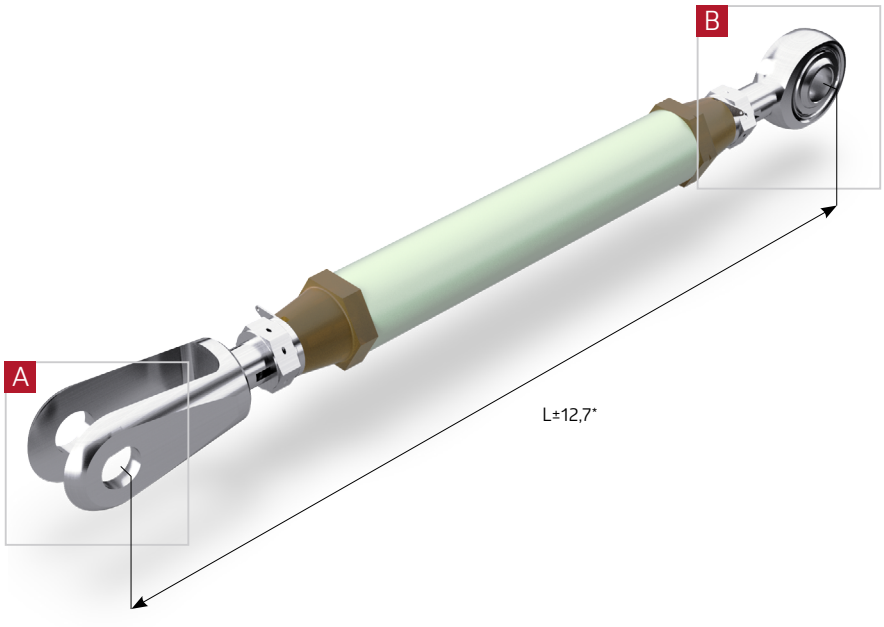

View A

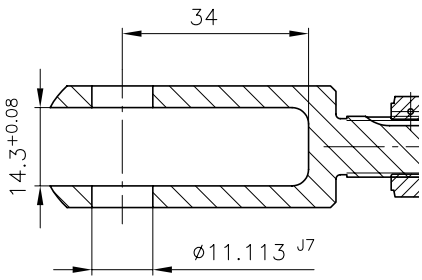

View B

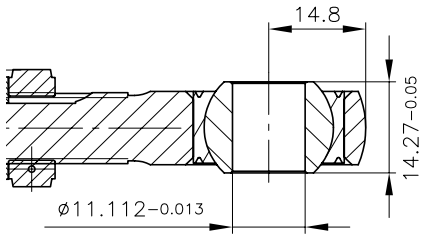

* adjustable range [mm]

ABS-no.	GMT-no.	Ultimate tension load [kN]	Ultimate compression load [kN]	Weight [g]	Rod body outer Ø [mm]	Length L [mm]	Material Rod body	Material Ends
ABS1214 B5 2639 K	65003002	16	21	383	22,2	263,9	AL	CRES
ABS1214 B5 3515 M	65003003	26	26	436	25,4	351,5	AL	CRES
ABS1214 B5 5031 N	65003004	46,5	11	526	25,4	503,1	AL	CRES
ABS1214 B5 5437 K	65003005	16	21	550	25,4	543,7	AL	CRES
ABS1214 B5 11154 L	65003001	32	8	890	25,4	1115,4	AL	CRES
ABS1214 BE 2639 K	65015802	16	21	383	22,2	263,9	AL	CRES
ABS1214 BE 3515 M	65015803	26	26	436	25,4	351,5	AL	CRES
ABS1214 BE 5031 N	65015804	46,5	11	526	25,4	503,1	AL	CRES
ABS1214 BE 5437 K	65015805	16	21	550	25,4	543,7	AL	CRES
ABS1214 BE 11154 L	65015801	32	8	890	25,4	1115,4	AL	CRES

TIE RODS ACC. TO ABS1214 GMT-NO. 650031.., 650154..

Traceparts

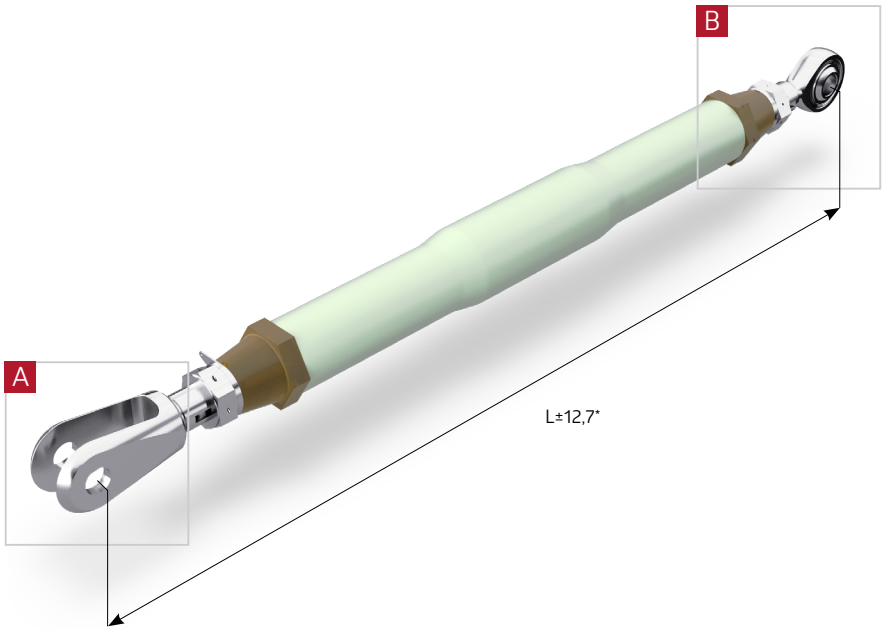

View A

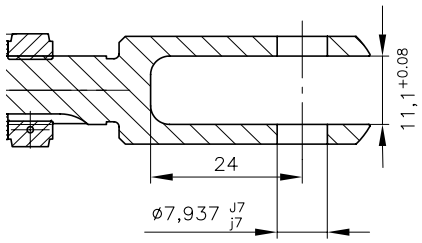

View B

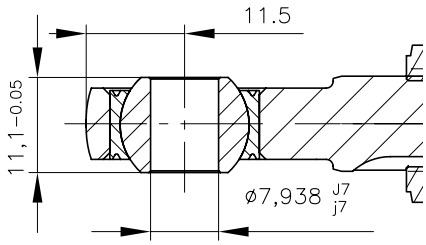

* adjustable range [mm]

ABS-no.	GMT-no.	Ultimate tension load [kN]	Ultimate compression load [kN]	Weight [g]	Rod body outer ∅ [mm]	Length L [mm]	Material Rod body	Material Ends
ABS1214 B1 3160 C	65003103	33,5	16,5	336	25,4	316	AL	CRES
ABS1214 B1 3340 C	65003104	33,5	16,5	336	25,4	334	AL	CRES
ABS1214 BA 3160 C	65015401	33,5	16,5	336	25,4	316	AL	CRES
ABS1214 BA 3340 C	65015402	33,5	16,5	336	25,4	334	AL	CRES

TIE RODS ACC. TO ABS1214 GMT-NO. 650047..

Traceparts

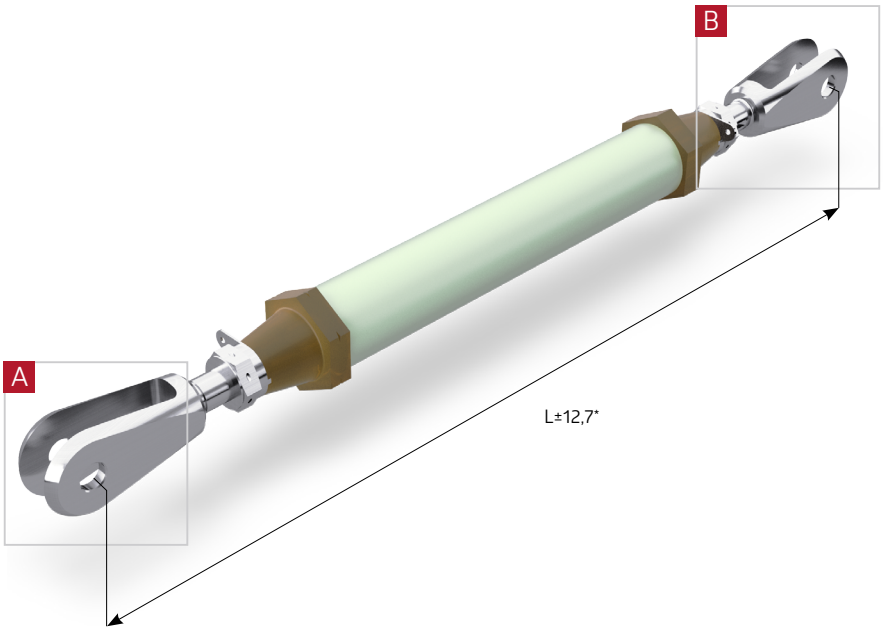

View A

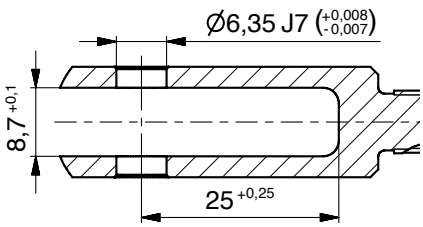

View B

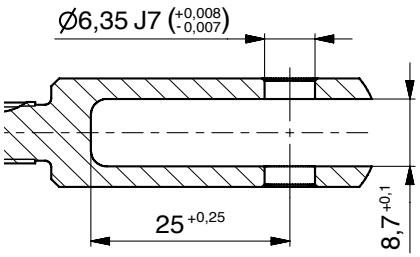

* adjustable range [mm]

ABS-no.	GMT-no.	Ultimate tension load [kN]	Ultimate compression load [kN]	Weight [g]	Rod body outer Ø [mm]	Length L [mm]	Material Rod body	Material Ends
ABS1214 A2 2500 U	65004721	18,5	8	192	20	250	AL	CRES
ABS1214 A2 2550 U	65004722	18,5	8	194	20	255	AL	CRES
ABS1214 A2 2650 U	65004723	18,5	8	197	20	265	AL	CRES
ABS1214 A2 3000 U	65004711	14	8	200	20	300	AL	CRES
ABS1214 A2 3200 U	65004715	14	8	206	20	320	AL	CRES
ABS1214 A2 3400 U	65004710	14	8	213	20	340	AL	CRES
ABS1214 A2 3500 U	65004716	14	8	226	20	350	AL	CRES
ABS1214 A2 3700 U	65004701	14	8	222	20	370	AL	CRES
ABS1214 A2 3800 U	65004717	14	8	226	20	380	AL	CRES
ABS1214 A2 4000 U	65004718	14	8	232	20	400	AL	CRES
ABS1214 A2 4200 U	65004702	14	8	238	20	420	AL	CRES
ABS1214 A2 4400 U	65004719	14	8	245	20	440	AL	CRES
ABS1214 A2 4500 U	65004703	14	8	248	20	450	AL	CRES
ABS1214 A2 4600 U	65004704	14	8	251	20	460	AL	CRES
ABS1214 A2 4800 U	65004709	14	8	258	20	480	AL	CRES
ABS1214 A2 5000 U	65004713	14	8	264	20	500	AL	CRES
ABS1214 A2 5200 U	65004720	14	8	276	20	520	AL	CRES
ABS1214 A2 5300 U	65004712	14	8	274	20	530	AL	CRES
ABS1214 A2 5400 U	65004705	14	8	277	20	540	AL	CRES
ABS1214 A2 5600 U	65004714	14	8	283	20	560	AL	CRES
ABS1214 A2 5800 U	65004706	14	8	289	20	580	AL	CRES
ABS1214 A2 5900 U	65004707	14	8	298	20	590	AL	CRES
ABS1214 A2 6000 U	65004708	14	8	296	20	600	AL	CRES

TIE RODS ACC. TO ABS1214 GMT-NO. 650049.., 650150..

Traceparts

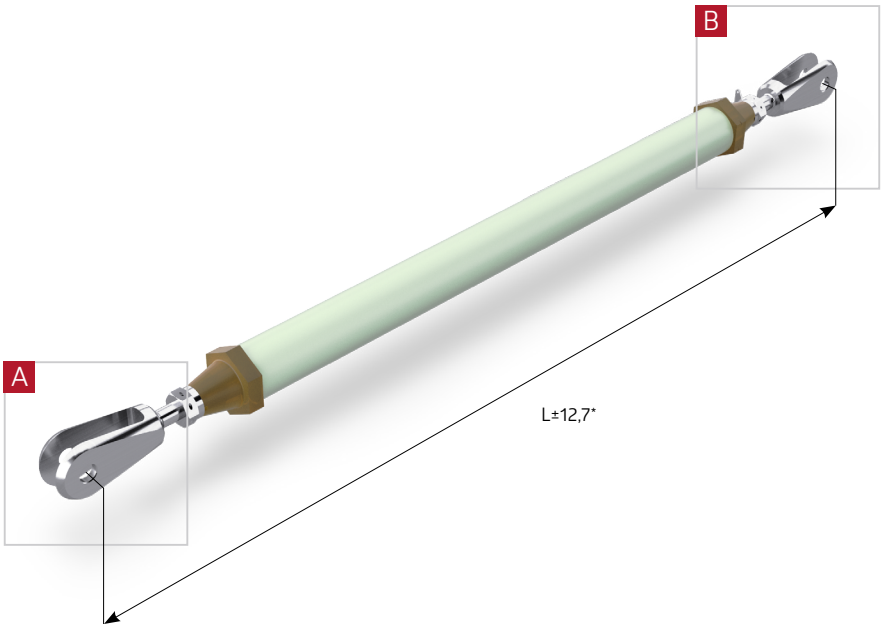

View A

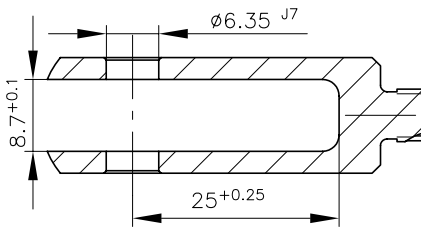

View B

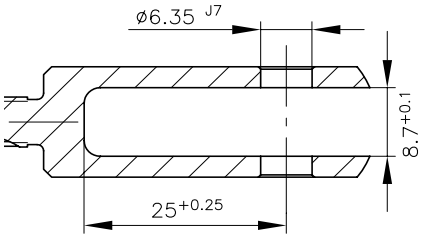

* adjustable range [mm]

ABS-no.	GMT-no.	Ultimate tension load [kN]	Ultimate compression load [kN]	Weight [g]	Rod body outer Ø [mm]	Length L [mm]	Material Rod body	Material Ends
ABS1214 A3 3800 T	65004914	13	4,5	202	20	380	AL	CRES
ABS1214 A3 4100 T	65004904	13	4,5	211	20	410	AL	CRES
ABS1214 A3 4200 T	65004906	13	4,5	214	20	420	AL	CRES
ABS1214 A3 4300 T	65004901	13	4,5	218	20	430	AL	CRES
ABS1214 A3 4500 T	65004915	13	4,5	224	20	450	AL	CRES
ABS1214 A3 4600 T	65004916	13	4,5	227	20	460	AL	CRES
ABS1214 A3 5000 T	65004902	13	4,5	240	20	500	AL	CRES
ABS1214 A3 5200 T	65004907	13	4,5	246	20	520	AL	CRES
ABS1214 A3 5400 T	65004917	13	4,5	253	20	540	AL	CRES
ABS1214 A3 5600 T	65004911	13	4,5	259	20	560	AL	CRES
ABS1214 A3 5700 T	65004903	13	4,5	262	20	570	AL	CRES
ABS1214 A3 5800 T	65004908	13	4,5	265	20	580	AL	CRES
ABS1214 A3 6100 T	65004909	13	4,5	275	20	610	AL	CRES
ABS1214 A3 6234 T	65004910	13	4,5	279	20	623,4	AL	CRES
ABS1214 A3 6300 T	65004918	13	4,5	290	20	630	AL	CRES
ABS1214 A3 6400 T	65004913	13	4,5	285	20	640	AL	CRES
ABS1214 A3 6500 T	65004912	13	4,5	288	20	650	AL	CRES
ABS1214 AC 3800 T	65015014	13	4,5	202	20	380	AL	CRES
ABS1214 AC 4100 T	65015004	13	4,5	211	20	410	AL	CRES
ABS1214 AC 4200 T	65015006	13	4,5	215	20	420	AL	CRES
ABS1214 AC 4300 T	65015001	13	4,5	218	20	430	AL	CRES
ABS1214 AC 4500 T	65015015	13	4,5	224	20	450	AL	CRES
ABS1214 AC 5000 T	65015002	13	4,5	240	20	500	AL	CRES
ABS1214 AC 5200 T	65015007	13	4,5	245	20	520	AL	CRES
ABS1214 AC 5600 T	65015011	13	4,5	259	20	560	AL	CRES

TIE RODS ACC. TO ABS1214 GMT-NO. 650049.., 650150..

Traceparts

ABS-no.	GMT-no.	Ultimate tension load [kN]	Ultimate compression load [kN]	Weight [g]	Rod body outer ∅ [mm]	Length L [mm]	Material Rod body	Material Ends
ABS1214 AC 5700 T	65015003	13	4,5	262	20	570	AL	CRES
ABS1214 AC 5800 T	65015008	13	4,5	266	20	580	AL	CRES
ABS1214 AC 6100 T	65015009	13	4,5	275	20	610	AL	CRES
ABS1214 AC 6234 T	65015010	13	4,5	279	20	623,4	AL	CRES
ABS1214 AC 6300 T	65015016	13	4,5	289	20	630	AL	CRES
ABS1214 AC 6400 T	65015013	13	4,5	285	20	640	AL	CRES
ABS1214 AC 6500 T	65015012	13	4,5	288	20	650	AL	CRES
ABS1214 AC 6700 T	65015005	13	4,5	294	20	670	AL	CRES

TIE RODS ACC. TO ABS1214 GMT-NO. 65005101, 65015601

Traceparts

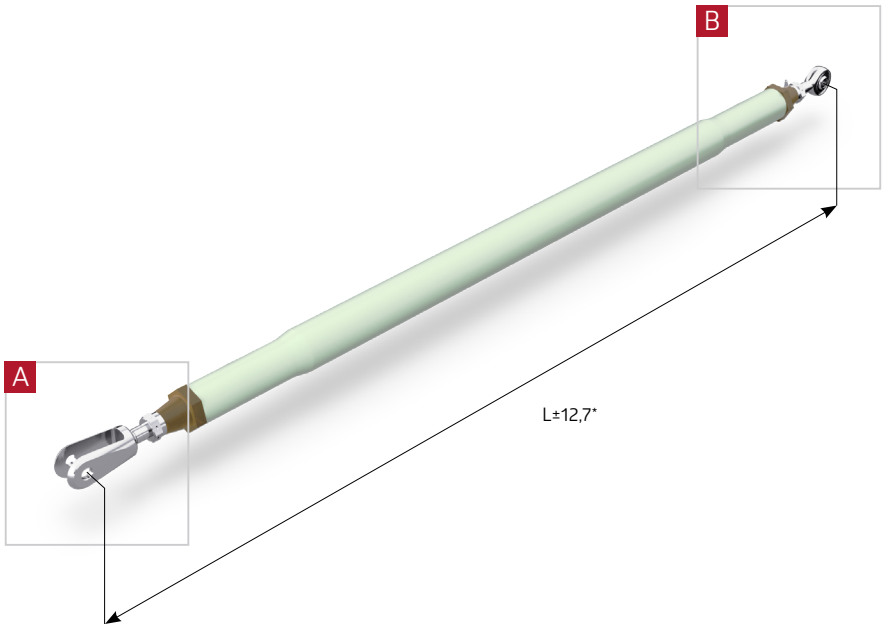

View A

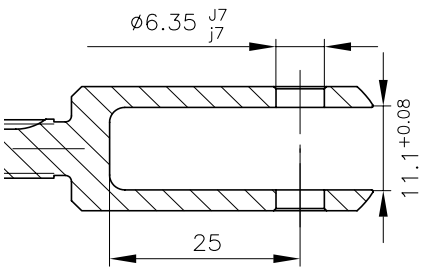

View B

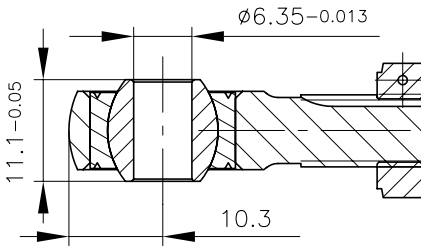

* adjustable range [mm]

ABS-no.	GMT-no.	Ultimate tension load [kN]	Ultimate compression load [kN]	Weight [g]	Rod body outer Ø [mm]	Length L [mm]	Material Rod body	Material Ends
ABS1214 B3 6050 W	65005101	12	12	422	25,4	605	AL	CRES
ABS1214 BC 6050 W	65015601	12	12	422	25,4	605	AL	CRES

TIE RODS ACC. TO ABS1214 GMT-NO. 650064.., 650151..

Traceparts

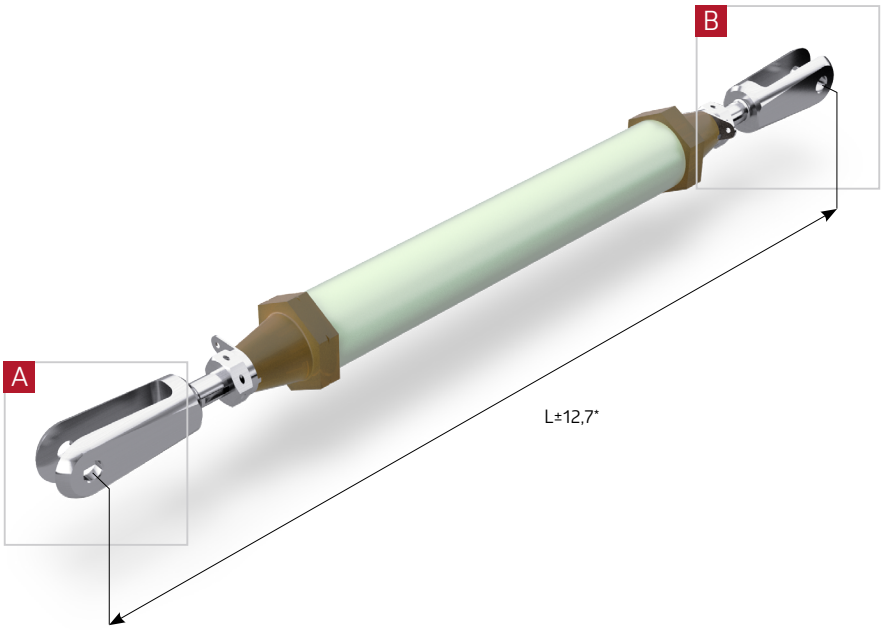

View A

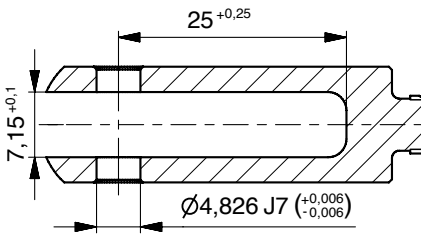

View B

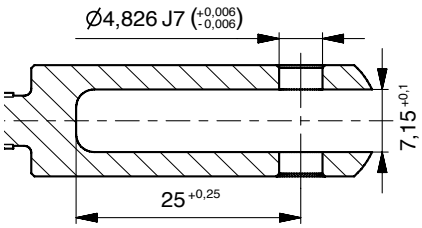

* adjustable range [mm]

ABS-no.	GMT-no.	Ultimate tension load [kN]	Ultimate compression load [kN]	Weight [g]	Rod body outer Ø [mm]	Length L [mm]	Material Rod body	Material Ends
ABS1214 A5 2600 T	65006415	13	4,5	162	20	260	AL	CRES
ABS1214 A5 2800T	65006416	13	4,5	168	20	280	AL	CRES
ABS1214 A5 3000 T	65006417	13	4,5	174	20	300	AL	CRES
ABS1214 A5 3800 T	65006406	13	4,5	192	20	380	AL	CRES
ABS1214 A5 4000 T	65006418	13	4,5	206	20	400	AL	CRES
ABS1214 A5 4100 T	65006401	13	4,5	201	20	410	AL	CRES
ABS1214 A5 4200 T	65006409	13	4,5	206	20	420	AL	CRES
ABS1214 A5 4300 T	65006410	13	4,5	208	20	430	AL	CRES
ABS1214 A5 5000 T	65006411	13	4,5	230	20	500	AL	CRES
ABS1214 A5 5200 T	65006412	13	4,5	237	20	520	AL	CRES
ABS1214 A5 5600 T	65006413	13	4,5	249	20	560	AL	CRES
ABS1214 A5 5700 T	65006403	13	4,5	252	20	570	AL	CRES
ABS1214 A5 5800 T	65006407	13	4,5	257	20	580	AL	CRES
ABS1214 A5 6000 T	65006419	13	4,5	270	20	600	AL	CRES
ABS1214 A5 6100 T	65006408	13	4,5	265	20	610	AL	CRES
ABS1214 A5 6234 T	65006402	13	4,5	269	20	623,4	AL	CRES
ABS1214 A5 6400 T	65006404	13	4,5	275	20	640	AL	CRES
ABS1214 A5 6500 T	65006405	13	4,5	278	20	650	AL	CRES
ABS1214 A5 6700 T	65006414	13	4,5	284	20	670	AL	CRES
ABS1214 AE 2300 T	65015120	13	4,5	132	20	230	AL	CRES
ABS1214 AE 2600 T	65015117	13	4,5	161	20	260	AL	CRES
ABS1214 AE 2800 T	65015118	13	4,5	167	20	280	AL	CRES
ABS1214 AE 3000 T	65015119	13	4,5	174	20	300	AL	CRES
ABS1214 AE 3800 T	65015102	13	4,5	192	20	380	AL	CRES
ABS1214 AE 4000 T	65015115	13	4,5	206	20	400	AL	CRES

TIE RODS ACC. TO ABS1214 GMT-NO. 650064.., 650151..

Traceparts

ABS-no.	GMT-no.	Ultimate tension load [kN]	Ultimate compression load [kN]	Weight [g]	Rod body outer ∅ [mm]	Length L [mm]	Material Rod body	Material Ends
ABS1214 AE 4100 T	65015103	13	4,5	201	20	410	AL	CRES
ABS1214 AE 4200 T	65015104	13	4,5	205	20	420	AL	CRES
ABS1214 AE 4300 T	65015105	13	4,5	208	20	430	AL	CRES
ABS1214 AE 5000 T	65015106	13	4,5	230	20	500	AL	CRES
ABS1214 AE 5200 T	65015107	13	4,5	237	20	520	AL	CRES
ABS1214 AE 5600 T	65015108	13	4,5	249	20	560	AL	CRES
ABS1214 AE 5700 T	65015109	13	4,5	252	20	570	AL	CRES
ABS1214 AE 5800 T	65015110	13	4,5	256	20	580	AL	CRES
ABS1214 AE 6000 T	65015116	13	4,5	270	20	600	AL	CRES
ABS1214 AE 6100 T	65015111	13	4,5	265	20	610	AL	CRES
ABS1214 AE 6234 T	65015112	13	4,5	270	20	623,4	AL	CRES
ABS1214 AE 6400 T	65015113	13	4,5	275	20	640	AL	CRES
ABS1214 AE 6500 T	65015114	13	4,5	278	20	650	AL	CRES
ABS1214 AE 6700 T	65015101	13	4,5	284	20	670	AL	CRES
ABS1214 AE 7800 T	65015121	13	4,5	327	20	780	AL	CRES

TIE RODS ACC. TO ABS1214 GMT-NO. 65007001

Traceparts

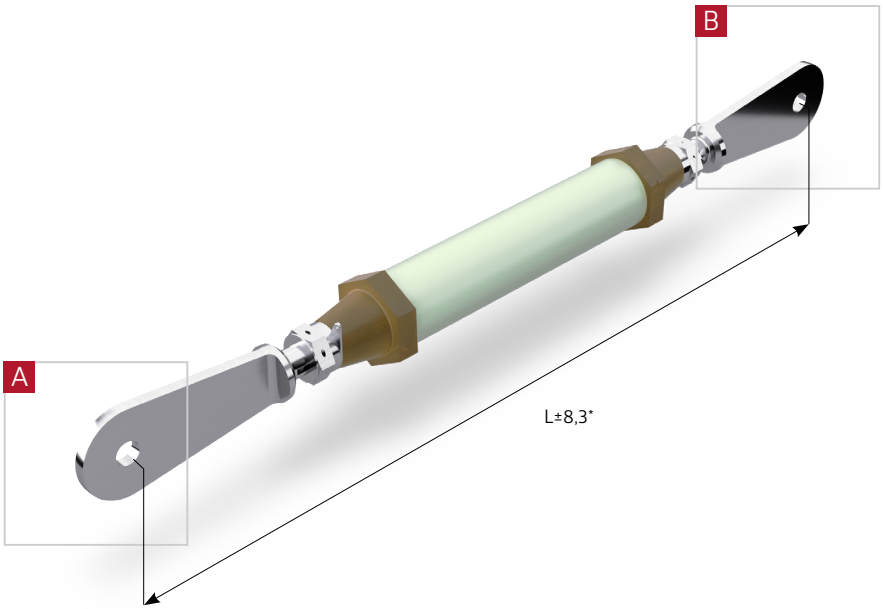

View A

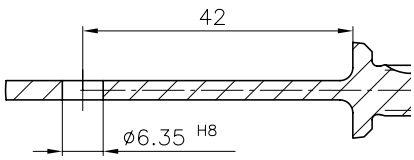

View B

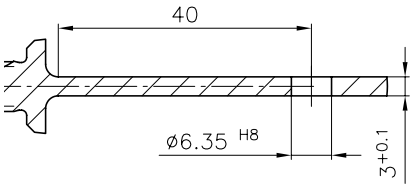

* adjustable range [mm]

ABS-no.	GMT-no.	Ultimate tension load [kN]	Ultimate compression load [kN]	Weight [g]	Rod body outer Ø [mm]	Length L [mm]	Material Rod body	Material Ends
ABS1214 D1 2450 P	65007001	5	5	173	20	245	AL	VA

TIE RODS ACC. TO ABS1214 GMT-NO. 65007101

Traceparts

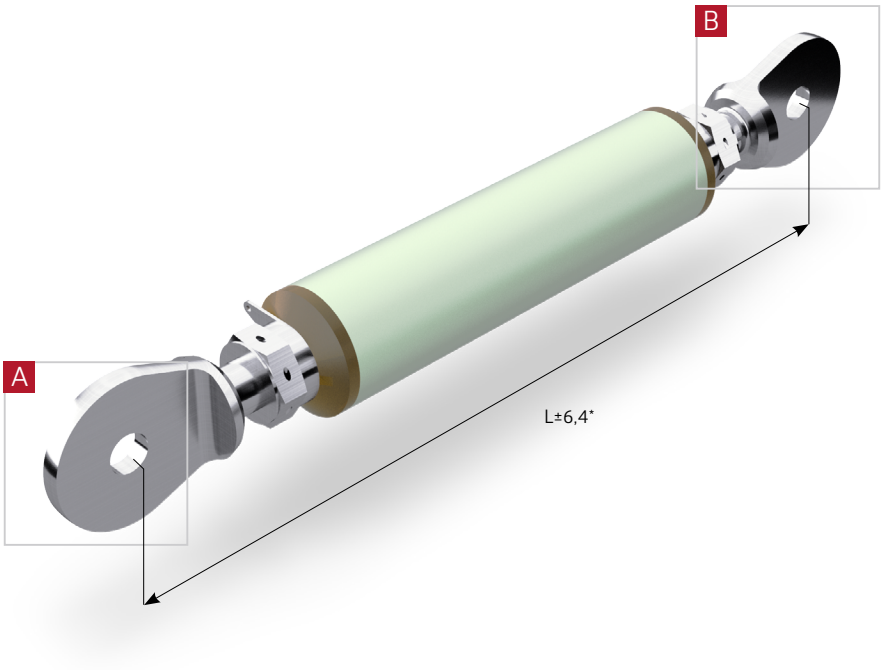

View A

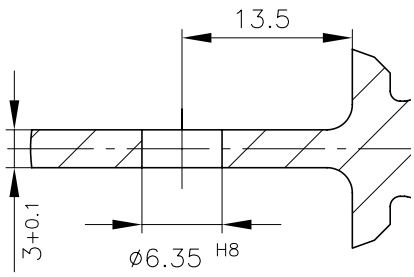

View B

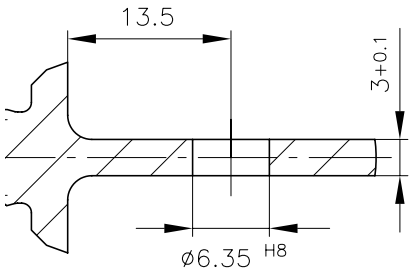

* adjustable range [mm]

ABS-no.	GMT-no.	Ultimate tension load [kN]	Ultimate compression load [kN]	Weight [g]	Rod body outer Ø [mm]	Length L [mm]	Material Rod body	Material Ends
ABS1214 D2 1450 P	65007101	5	5	122	20	145	AL	CRES

TIE RODS ACC. TO ABS1214 GMT-NO. 650077.., 650155..

Traceparts

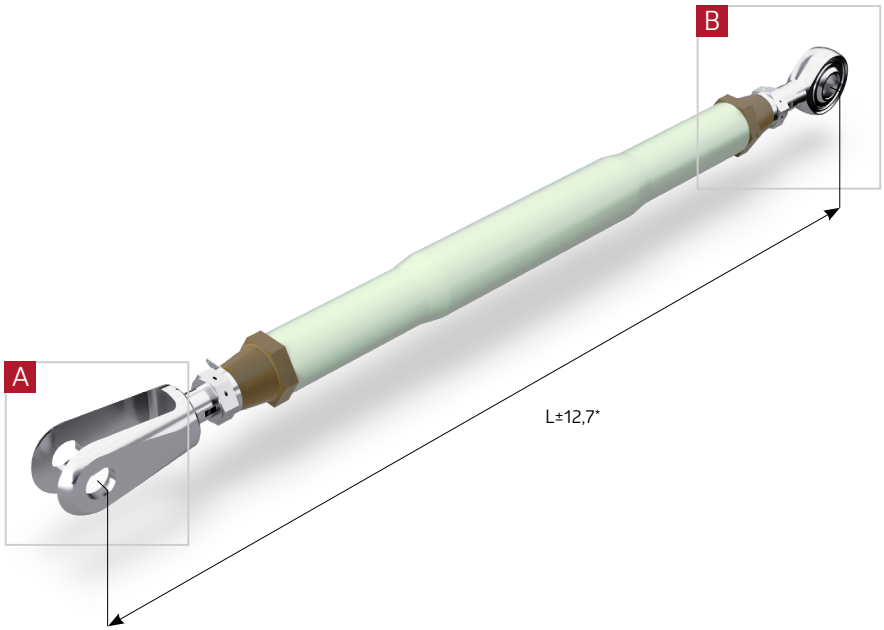

View A

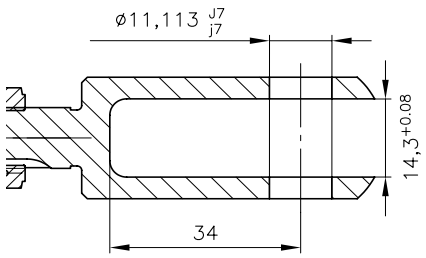

View B

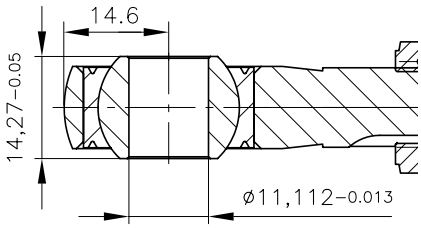

* adjustable range [mm]

ABS-no.	GMT-no.	Ultimate tension load [kN]	Ultimate compression load [kN]	Weight [g]	Rod body outer Ø [mm]	Length L [mm]	Material Rod body	Material Ends
ABS1214 B2 3800 C	65007702	33,5	16,5	447	25,4	380	AL	CRES
ABS1214 B2 4500 C	65007701	33,5	16,5	488	25,4	450	AL	CRES
ABS1214 BB 3800 C	65015501	33,5	16,5	447	25,4	380	AL	CRES
ABS1214 BB 4500 C	65015502	33,5	16,5	488	25,4	450	AL	CRES

TIE RODS ACC. TO ABS1214 GMT-NO. 65007801, 65015901

Traceparts

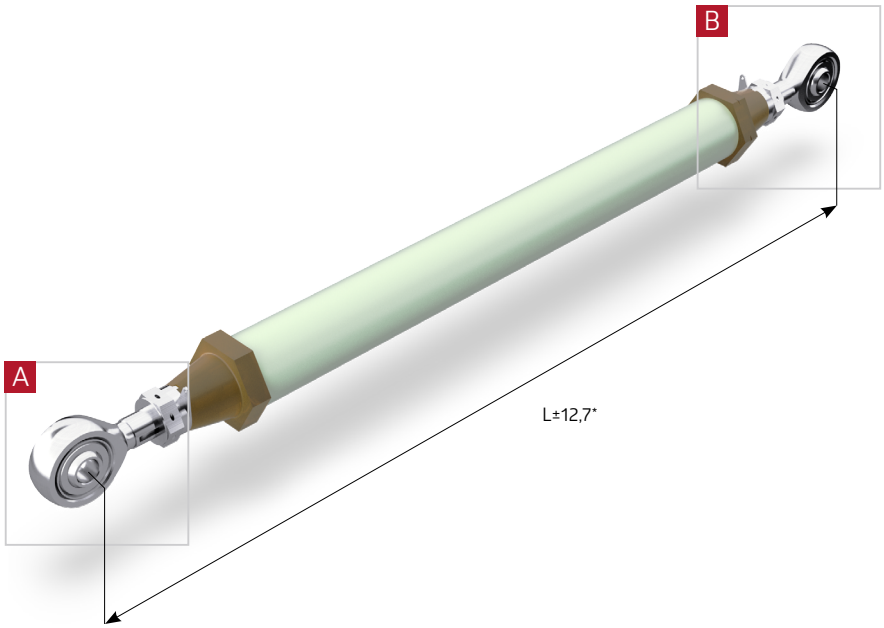

View A

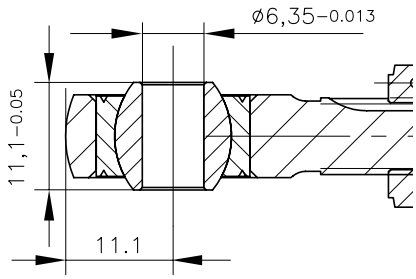

View B

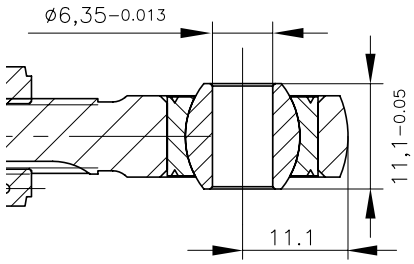

* adjustable range [mm]

ABS-no.	GMT-no.	Ultimate tension load [kN]	Ultimate compression load [kN]	Weight [g]	Rod body outer Ø [mm]	Length L [mm]	Material Rod body	Material Ends
ABS1214 C1 2900 T	65007801	13	4,5	205	20	290	AL	CRES
ABS1214 CA 2900 T	65015901	13	4,5	205	16	290	AL	CRES

TIE RODS ACC. TO ABS1214 GMT-NO. 65010301, 65015201

Traceparts

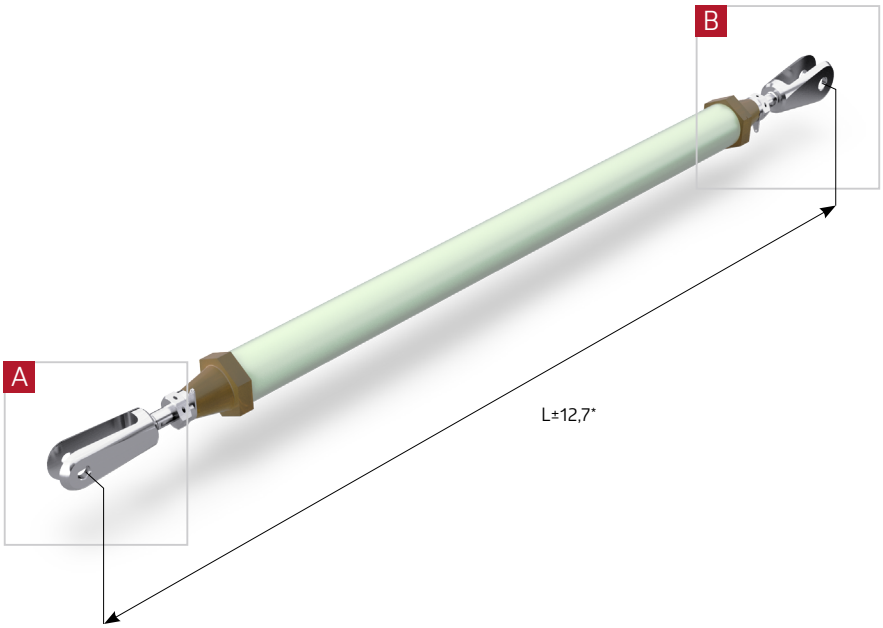

View A

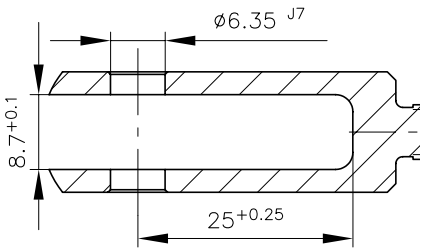

View B

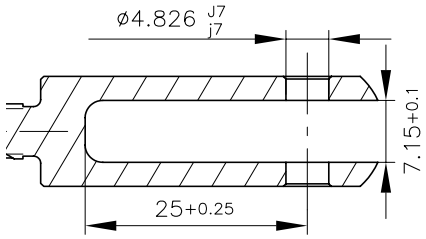

* adjustable range [mm]

ABS-no.	GMT-no.	Ultimate tension load [kN]	Ultimate compression load [kN]	Weight [g]	Rod body outer Ø [mm]	Length L [mm]	Material Rod body	Material Ends
ABS1214 A6 4100 T	65010301	13	4,5	203	20	410	AL	CRES
ABS1214 AF 4100 T	65015201	13	4,5	206	20	410	AL	CRES

TIE RODS ACC. TO ABS1214 GMT-NO. 650105.., 650153..

Traceparts

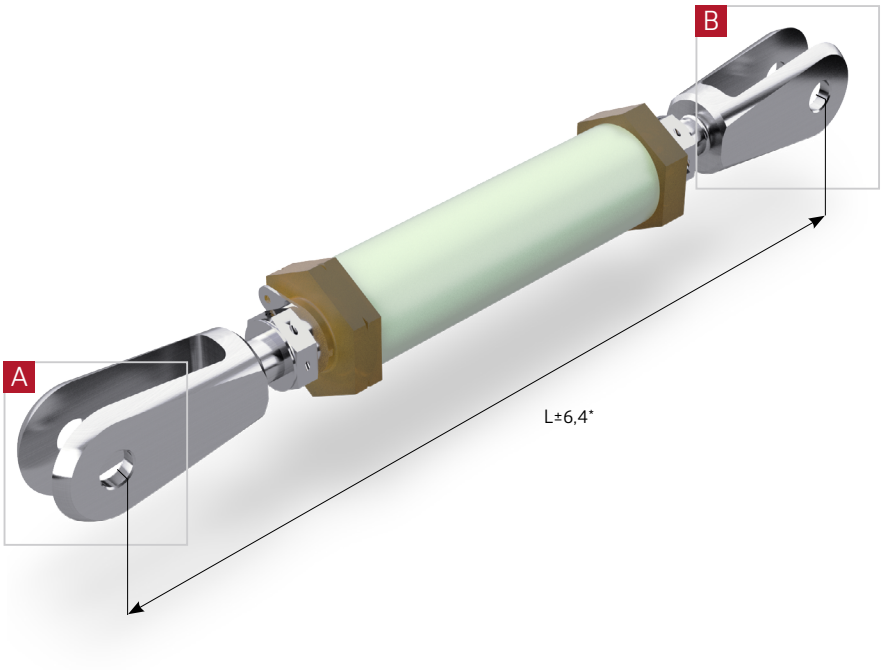

View A

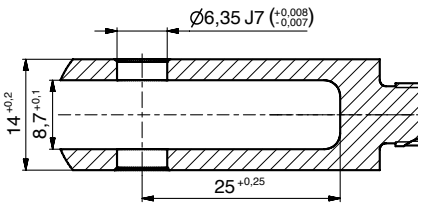

View B

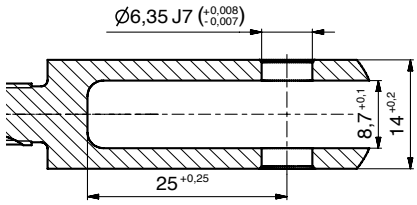

* adjustable range [mm]

ABS-no.	GMT-no.	Ultimate tension load [kN]	Ultimate compression load [kN]	Weight [g]	Rod body outer Ø [mm]	Length L [mm]	Material Rod body	Material Ends
ABS1214 A7 1720 U	65010501	18,5	8	155	20	172	AL	CRES
ABS1214 A7 1900 U	65010502	18,5	8	161	20	190	AL	CRES
ABS1214 A7 2100 U	65010503	18,5	8	168	20	210	AL	CRES
ABS1214 A7 2200 U	65010504	18,5	8	171	20	220	AL	CRES
ABS1214 AG 1720 U	65015301	18,5	8	155	20	172	AL	CRES
ABS1214 AG 1900 U	65015302	18,5	8	161	20	190	AL	CRES
ABS1214 AG 2100 U	65015303	18,5	8	167	20	210	AL	CRES
ABS1214 AG 2200 U	65015304	18,5	8	170	20	220	AL	CRES

TIE RODS ACC. TO ABS1214 GMT-NO. 650145.., 650048..

Traceparts

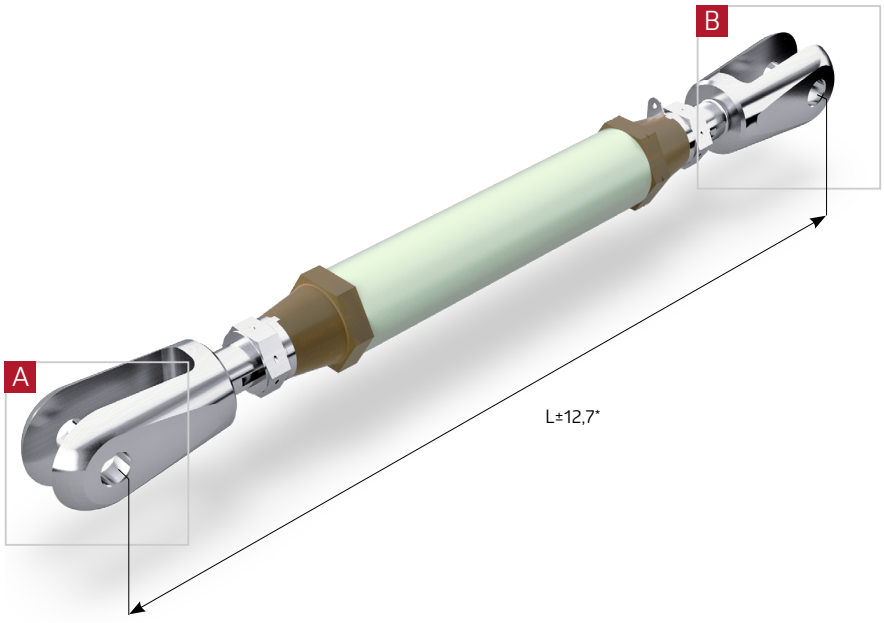

View A

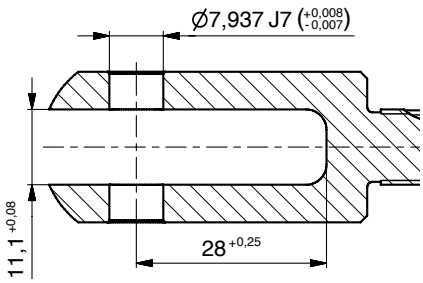

View B

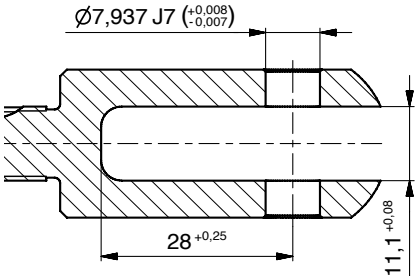

* adjustable range [mm]

ABS-no.	GMT-no.	Ultimate tension load [kN]	Ultimate compression load [kN]	Weight [g]	Rod body outer Ø [mm]	Length L [mm]	Material Rod body	Material Ends
ABS1214 A1 3000 V	65004819	53	27	396	22,2	300	AL	CRES
ABS1214 A1 3200 V	65004820	53	27	407	22,2	320	AL	CRES
ABS1214 A1 3400 V	65004801	53	27	424	25,4	340	AL	CRES
ABS1214 A1 3500 V	65004802	53	27	429,5	25,4	350	AL	CRES
ABS1214 A1 3600 V	65004816	53	27	435	25,4	360	AL	CRES
ABS1214 A1 3800 V	65004821	53	27	447	25,4	380	AL	CRES
ABS1214 A1 4000 V	65004803	53	27	459	25,4	400	AL	CRES
ABS1214 A1 4100 V	65004804	53	27	465	25,4	410	AL	CRES
ABS1214 A1 4200 V	65004805	53	27	471	25,4	420	AL	CRES
ABS1214 A1 4300 V	65004806	53	27	477	25,4	430	AL	CRES
ABS1214 A1 4400 V	65004807	53	27	483	25,4	440	AL	CRES
ABS1214 A1 4600 V	65004818	53	27	495	25,4	460	AL	CRES
ABS1214 A1 4800 V	65004817	53	27	507	25,4	480	AL	CRES
ABS1214 A1 5000 V	65004822	53	27	519	25,4	500	AL	CRES
ABS1214 A1 5200 V	65004808	53	27	531	25,4	520	AL	CRES
ABS1214 A1 5300 V	65004809	53	27	537	25,4	530	AL	CRES
ABS1214 A1 5400 V	65004810	53	27	543	25,4	540	AL	CRES
ABS1214 A1 5500 V	65004811	53	27	549	25,4	550	AL	CRES
ABS1214 A1 5700 V	65004812	53	27	561	25,4	570	AL	CRES
ABS1214 AA 2500 V	65014523	53	27	378	22,2	250	AL	CRES
ABS1214 AA 3000 V	65014506	53	27	396	22,2	300	AL	CRES
ABS1214 AA 3200 V	65014507	53	27	407	22,2	320	AL	CRES
ABS1214 AA 3400 V	65014508	53	27	424	25,4	340	AL	CRES
ABS1214 AA 3500 V	65014509	53	27	250	25,4	350	AL	CRES
ABS1214 AA 3600 V	65014510	53	27	435	25,4	360	AL	CRES

TIE RODS ACC. TO ABS1214 GMT-NO. 650145.., 650048..

Traceparts

ABS-no.	GMT-no.	Ultimate tension load [kN]	Ultimate compression load [kN]	Weight [g]	Rod body outer ∅ [mm]	Length L [mm]	Material Rod body	Material Ends
ABS1214 AA 3800 V	65014511	53	27	447	25,4	380	AL	CRES
ABS1214 AA 4000 V	65014512	53	27	459	25,4	400	AL	CRES
ABS1214 AA 4100 V	65014513	53	27	465	25,4	410	AL	CRES
ABS1214 AA 4200 V	65014514	53	27	471	25,4	420	AL	CRES
ABS1214 AA 4300 V	65014515	53	27	477	25,4	430	AL	CRES
ABS1214 AA 4400 V	65014501	53	27	483	25,4	440	AL	CRES
ABS1214 AA 4600 V	65014516	53	27	495	25,4	460	AL	CRES

TIE RODS ACC. TO ABS1214 GMT-NO. 650146..

Traceparts

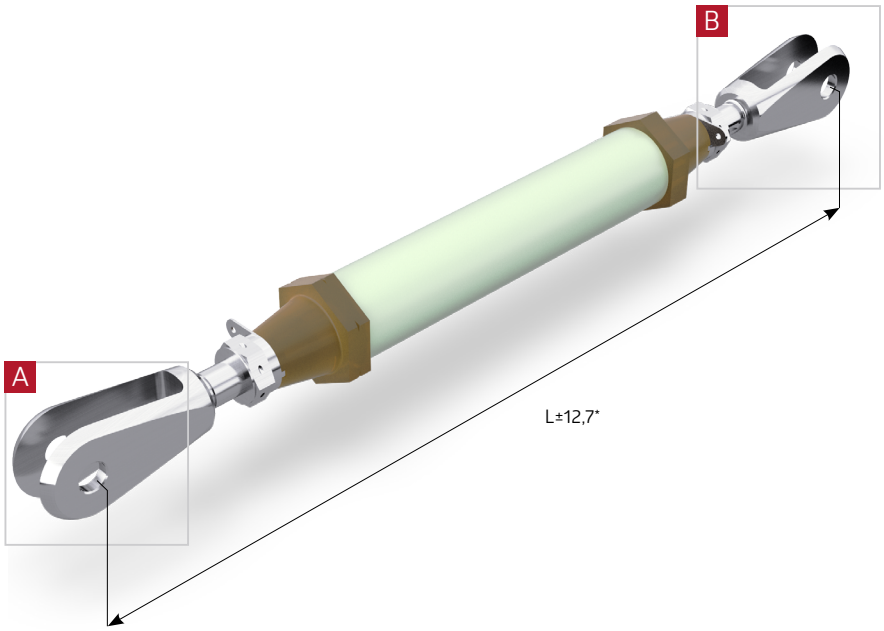

View A

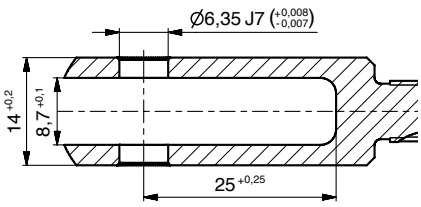

View B

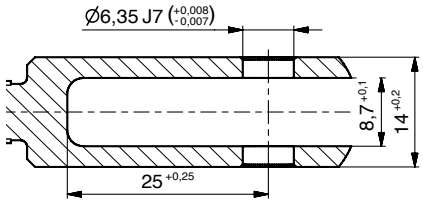

* adjustable range [mm]

ABS-no.	GMT-no.	Ultimate tension load [kN]	Ultimate compression load [kN]	Weight [g]	Rod body outer Ø [mm]	Length L [mm]	Material Rod body	Material Ends
ABS1214 AB 2300 U	65014624	18,5	8	186	20	230	AL	CRES
ABS1214 AB 2500 U	65014621	18,5	8	192	20	250	AL	CRES
ABS1214 AB 2550 U	65014622	18,5	8	194	20	255	AL	CRES
ABS1214 AB 2650 U	65014623	18,5	8	197	20	165	AL	CRES
ABS1214 AB 3000 U	65014603	18,5	8	206	20	300	AL	CRES
ABS1214 AB 3200 U	65014604	18,5	8	212	20	320	AL	CRES
ABS1214 AB 3400 U	65014605	18,5	8	219	20	340	AL	CRES
ABS1214 AB 3500 U	65014606	18,5	8	222	20	350	AL	CRES
ABS1214 AB 3700 U	65014607	18,5	8	228	20	370	AL	CRES
ABS1214 AB 3800 U	65014608	18,5	8	231	20	380	AL	CRES
ABS1214 AB 4000 U	65014609	18,5	8	238	20	400	AL	CRES
ABS1214 AB 4200 U	65014610	18,5	8	244	20	420	AL	CRES
ABS1214 AB 4400 U	65014611	18,5	8	251	20	440	AL	CRES
ABS1214 AB 4500 U	65014612	18,5	8	254	20	450	AL	CRES
ABS1214 AB 4600 U	65014613	18,5	8	257	20	460	AL	CRES
ABS1214 AB 4800 U	65014614	18,5	8	263	20	480	AL	CRES
ABS1214 AB 5000 U	65014615	18,5	8	270	20	500	AL	CRES
ABS1214 AB 5200 U	65014616	18,5	8	276	20	520	AL	CRES
ABS1214 AB 5300 U	65014617	18,5	8	279	20	530	AL	CRES
ABS1214 AB 5400 U	65014601	18,5	8	282	20	540	AL	CRES
ABS1214 AB 5600 U	65014618	18,5	8	289	20	560	AL	CRES
ABS1214 AB 5800 U	65014602	18,5	8	295	20	580	AL	CRES
ABS1214 AB 5900 U	65014619	18,5	8	298	20	590	AL	CRES
ABS1214 AB 6000 U	65014620	18,5	8	302	20	600	AL	CRES

TIE RODS ACC. TO ABS1214 GMT-NO. 650157.., 650065..

Traceparts

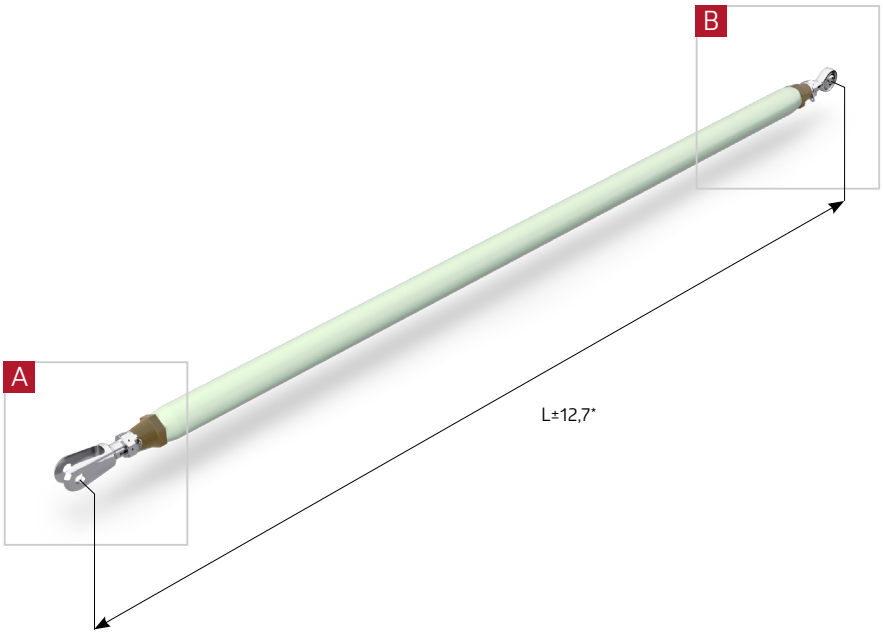

View A

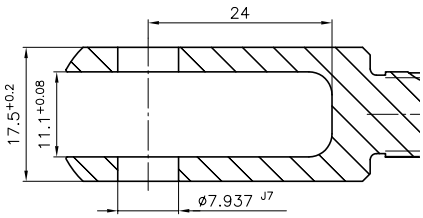

View B

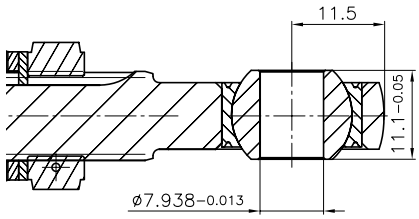

* adjustable range [mm]

ABS-no.	GMT-no.	Ultimate tension load [kN]	Ultimate compression load [kN]	Weight [g]	Rod body outer ∅ [mm]	Length L [mm]	Material Rod body	Material Ends
ABS1214 B4 8448 C	65006501	11	11	967	25,4	844,8	AL	CRES
ABS1214 B4 11373 C	65006502	11	11	1280	25,4	1137,3	AL	CRES
ABS1214 BD 8448 C	65015701	11	11	976	25,4	844,8	AL	CRES
ABS1214 BD 11373 C	65015702	11	11	1280	25,4	1137,3	AL	CRES

TIE RODS ACC. TO ABS1214 GMT-NO. 65039101, 650394..

Traceparts

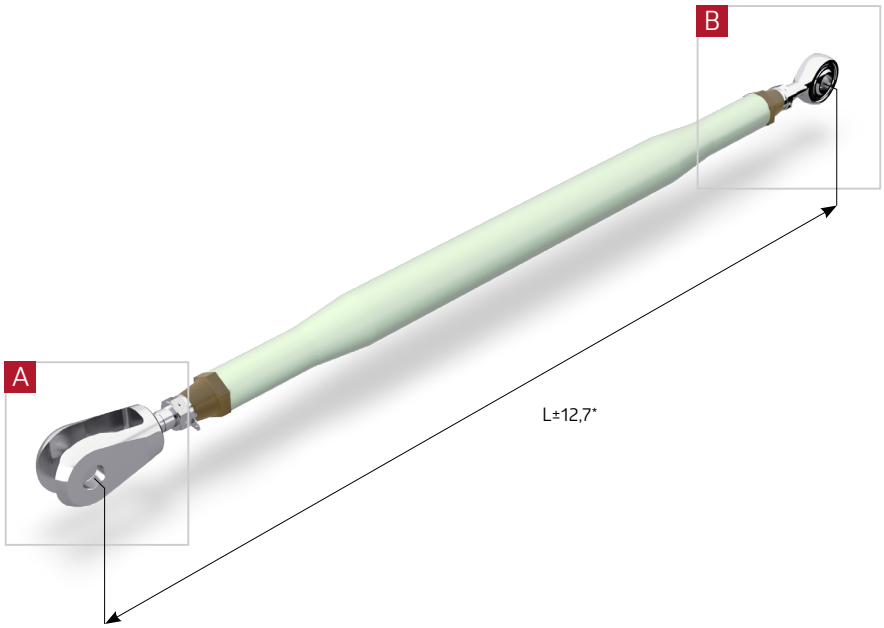

View A

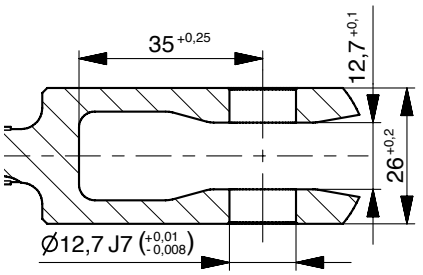

View B

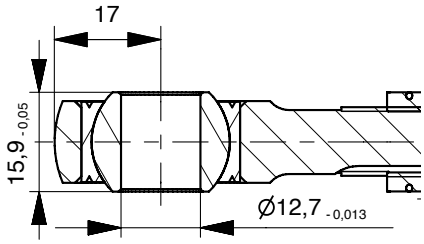

* adjustable range [mm]

ABS-no.	GMT-no.	Ultimate tension load [kN]	Ultimate compression load [kN]	Weight [g]	Rod body outer Ø [mm]	Length L [mm]	Material Rod body	Material Ends
ABS1214 B6 5000 A	65039101	9,8	27,8	683	31	683	AL	CRES
ABS1214 BF 5000 A	65039402	9,8	27,8	625	31	500	AL	CRES
ABS1214 BF 5900 A	65039401	9,8	27,8	662	31	590	AL	CRES
ABS1214 BF 6900 A	65039403	9,8	27,8	745	31	690	AL	CRES

TIE RODS ACC. TO ABS1214 GMT-NO. 650392.., 650396..

Traceparts

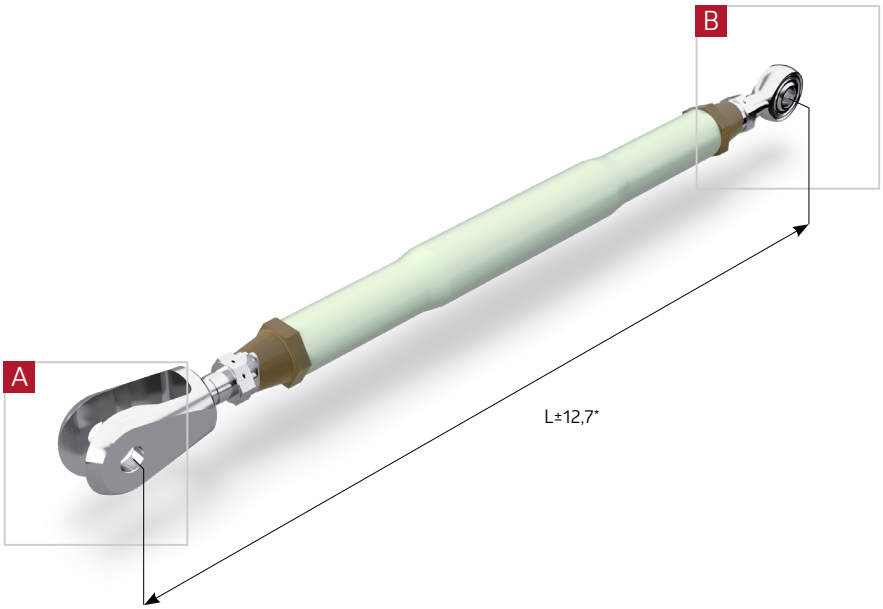

View A

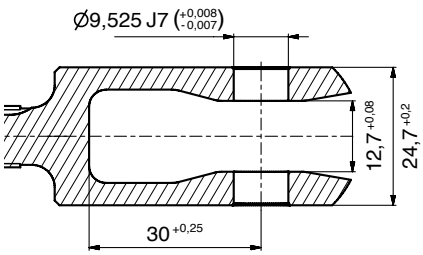

View B

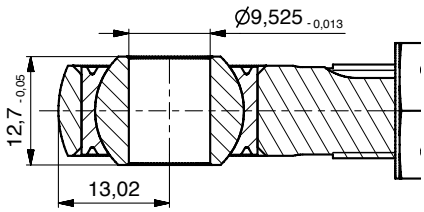

* adjustable range [mm]

ABS-no.	GMT-no.	Ultimate tension load [kN]	Ultimate compression load [kN]	Weight [g]	Rod body outer Ø [mm]	Length L [mm]	Material Rod body	Material Ends
ABS1214 B8 3700 B	65039201	16,6	14,7	442	25,4	370	AL	CRES
ABS1214 B8 4270 B	65039202	16,6	14,7	476	25,4	427	AL	CRES
ABS1214 BH 3340 B	65039603	16,6	14,7	420	25,4	334	AL	CRES
ABS1214 BH 3700 B	65039601	16,6	14,7	442	25,4	370	AL	CRES
ABS1214 BH 4270 B	65039602	16,6	14,7	476	25,4	427	AL	CRES
ABS1214 BH 7300 B	65039604	16,6	14,7	656	25,4	730	AL	CRES

TIE RODS ACC. TO ABS1214 GMT-NO. 650395..

Traceparts

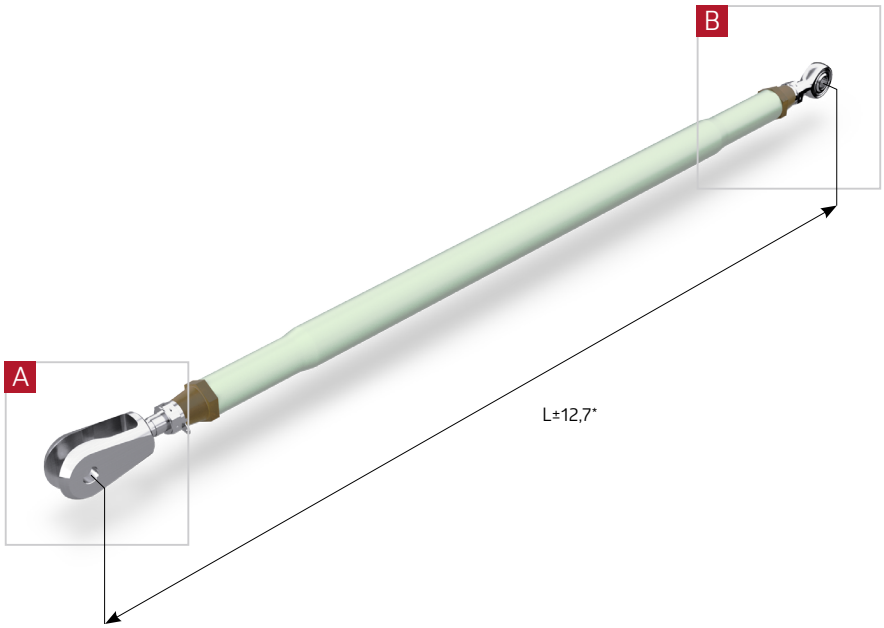

View A

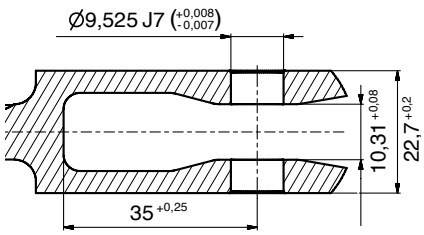

View B

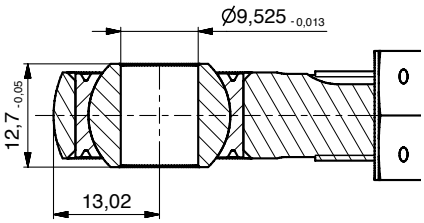

* adjustable range [mm]

ABS-no.	GMT-no.	Ultimate tension load [kN]	Ultimate compression load [kN]	Weight [g]	Rod body outer Ø [mm]	Length L [mm]	Material Rod body	Material Ends
ABS1214 B7 6390 B	65039501	16,6	14,7	612	25,4	639	AL	CRES
ABS1214 BG 3400 B	65039502	16,6	14,7	434	25,4	340	AL	CRES
ABS1214 BG 6390 B	65039501	16,6	14,7	612	25,4	639	AL	CRES
ABS1214 BG 7300 B	65039503	16,6	14,7	666	25,4	730	AL	CRES

TIE RODS ACC. TO ABS1214 GMT-NO. 650399.., 650370..

Traceparts

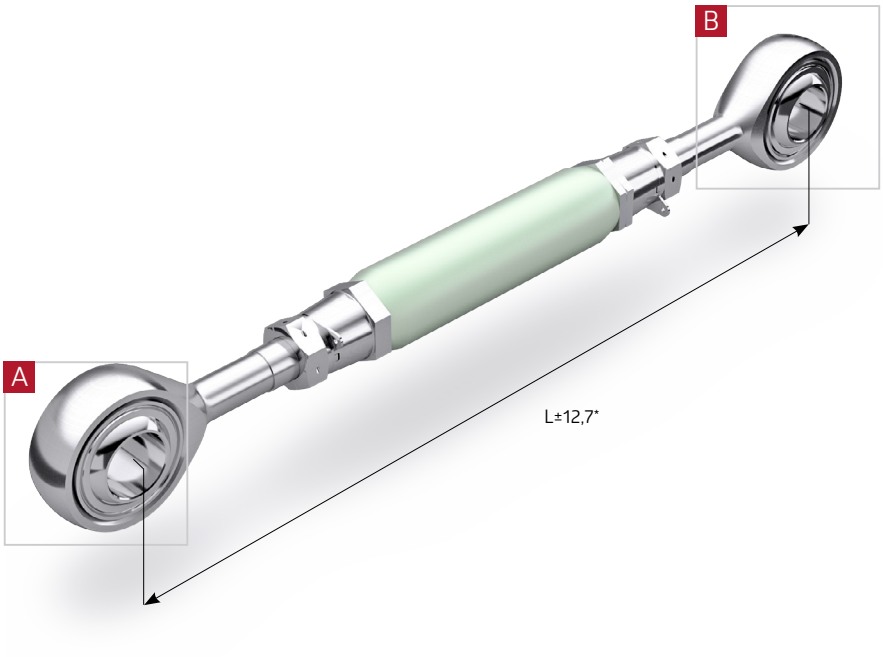

View A

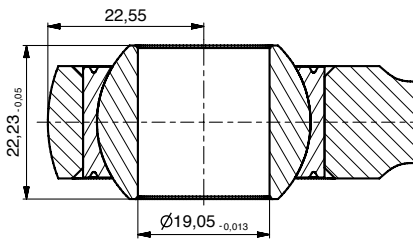

View B

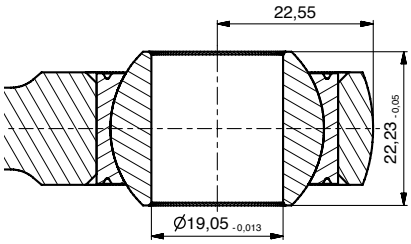

* adjustable range [mm]

ABS-no.	GMT-no.	Ultimate tension load [kN]	Ultimate compression load [kN]	Weight [g]	Rod body outer Ø [mm]	Length L [mm]	Material Rod body	Material Ends	Material threaded insert
ABS1214 C2 3140 D	65037001	75	22,6	781	25,4	314	AL	CRES	Titan
ABS1214 CB 2750 D	65039902	75	22,6	748	25,4	275	AL	CRES	Titan
ABS1214 CB 3140 D	65039901	75	22,6	781	25,4	314	AL	CRES	Titan
ABS1214 CB 4300 D	65039903	75	22,6	878	25,4	430	AL	CRES	Titan

TIE RODS ACC. TO ABS1214 GMT-NO. 650419.., 650420..

Traceparts

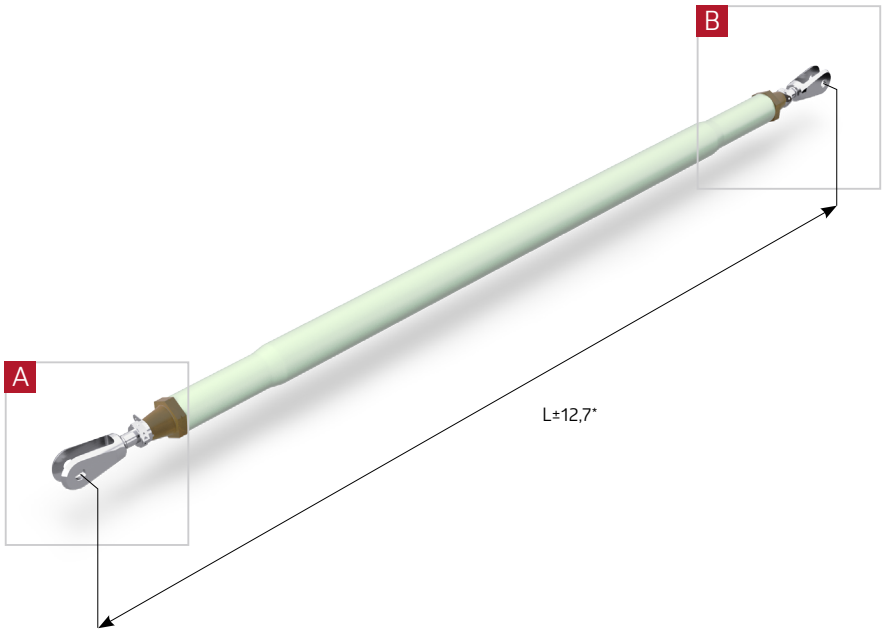

View A

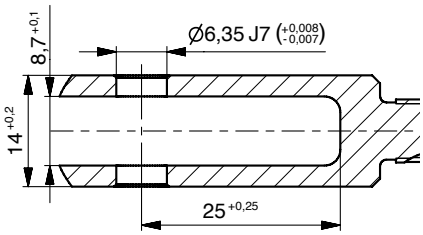

View B

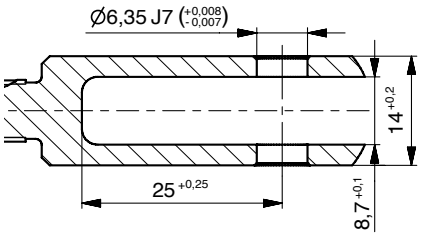

* adjustable range [mm]

ABS-no.	GMT-no.	Ultimate tension load [kN]	Ultimate compression load [kN]	Weight [g]	Rod body outer Ø [mm]	Length L [mm]	Material Rod body	Material Ends
ABS1214 E1 6700 U	65041901	18,5	8	465	25,4	670	AL	CRES
ABS1214 E1 7200 U	65041902	18,5	8	495	25,4	720	AL	CRES
ABS1214 E1 7850 U	65041903	18,5	8	533	25,4	785	AL	CRES
ABS1214 E1 9400 U	65041904	18,5	8	626	25,4	940	AL	CRES
ABS1214 EA 6350 U	65042002	18,5	8	444	25,4	635	AL	CRES
ABS1214 EA 6700 U	65042001	18,5	8	465	25,4	670	AL	CRES
ABS1214 EA 7200 U	65042004	18,5	8	495	25,4	720	AL	CRES
ABS1214 EA 7850 U	65042005	18,5	8	533	25,4	785	AL	CRES
ABS1214 EA 9400 U	65042006	18,5	8	626	25,4	940	AL	CRES
ABS1214 EA10000 U	65042003	18,5	8	661	25,4	1000	AL	CRES

TIE RODS ACC. TO ABS1214 GMT-NO. 650429.., 650430..

Traceparts

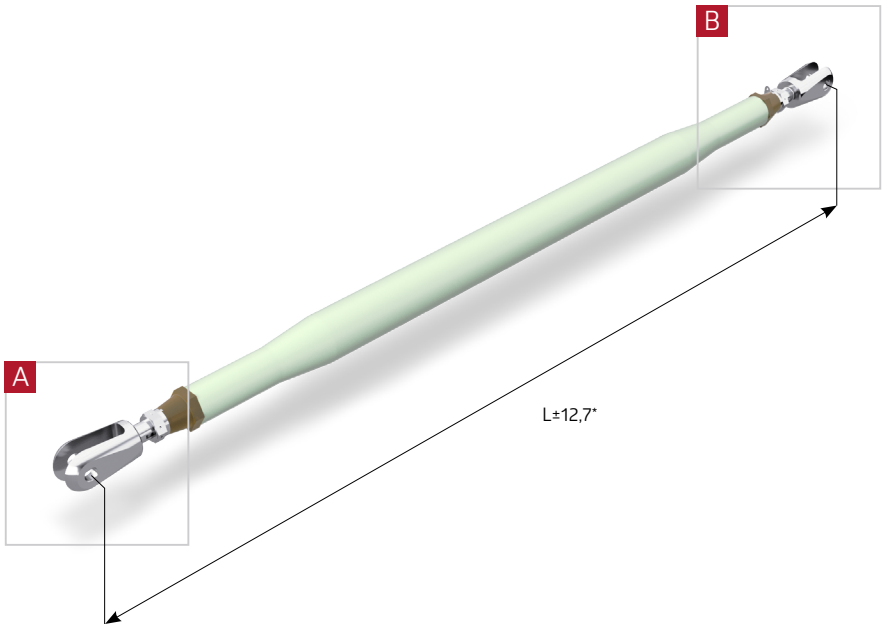

View A

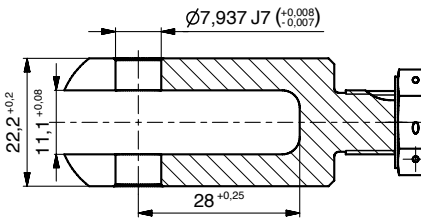

View B

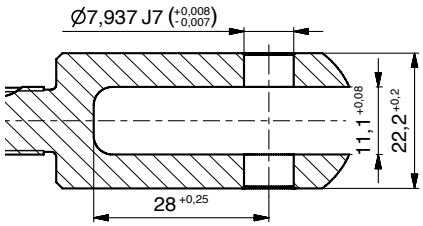

* adjustable range [mm]

ABS-no.	GMT-no.	Ultimate tension load [kN]	Ultimate compression load [kN]	Weight [g]	Rod body outer Ø [mm]	Length L [mm]	Material Rod body	Material Ends
ABS1214 A9 6650 V	65042901	53	27	652	31	665	AL	CRES
ABS1214 A9 6800 V	65042902	53	27	662	31	680	AL	CRES
ABS1214 A9 14200 H	65042903	20,5	4	1129	31	1420	AL	CRES
ABS1214 AK 5400 V	65043001	53	27	573	31	540	AL	CRES
ABS1214 AK 6650 V	65043002	53	27	652	31	665	AL	CRES
ABS1214 AK 6800 V	65043003	53	27	662	31	680	AL	CRES
ABS1214 AK 7000 V	65043004	53	27	674	31	700	AL	CRES
ABS1214 AK 13500 H	65043005	20,5	4	1084	31	1350	AL	CRES
ABS1214 AK 14200 H	65043006	20,5	4	1129	31	1420	AL	CRES
ABS1214 AK 17500 H	65043007	20,5	4	1337	31	1750	AL	CRES

DESCRIPTION TO TIE RODS ABS1188

Mainly applicable for interior fittings and mounting of units in fuselage and cabin, also usable as structure part.

Patented design

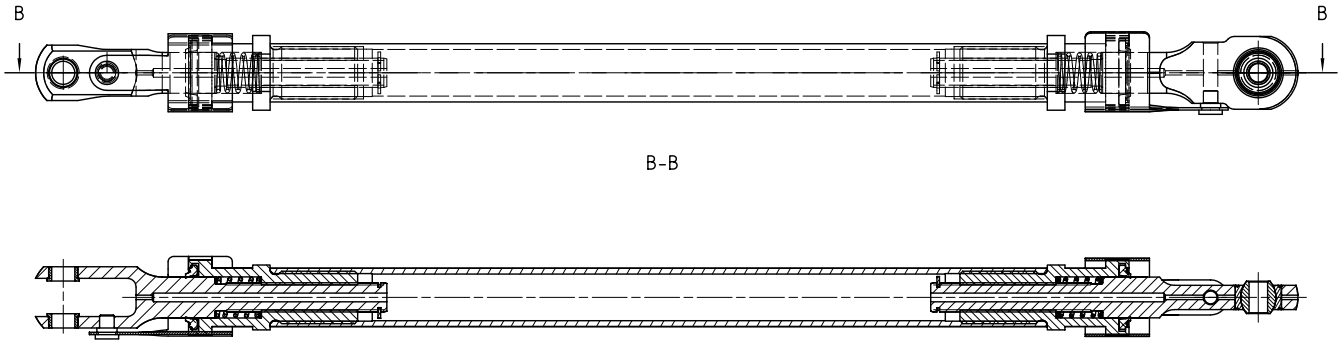

Advantage:

1. Simple and fast mounting by means of patented locking element.
2. Length adjustment in mounted condition is also possible with closed locking element.
3. Integrated securing against hollowing avoids too far unscrew of the thread while mounting.
4. Threaded plastic inserts avoids problems with corrosion inside the thread.
5. Threaded plastic inserts assures thermic insulation between fuselage and cabin.
6. Threaded plastic inserts assures acoustic insulation between fuselage and cabin.
7. Integrated sealing in the threaded inserts avoids the penetration of the inner thread with fluids.
8. Fork end with titan bushings for flexible design by modification of the titan bushings with equal fork geometry.
9. Fork end with titan bushings avoids problems with corrosion for contact with carbon fibre or aluminium parts.

Designation

Description block	Identity block				
Tie rod	ABS1188	A1	2560	V	G

Number of this standard
Assembly code:
Size code:
Fatigue Load category:
Size code:

COMPONENTS OF TIE RODS ABS1188

Components and their function

Rod end

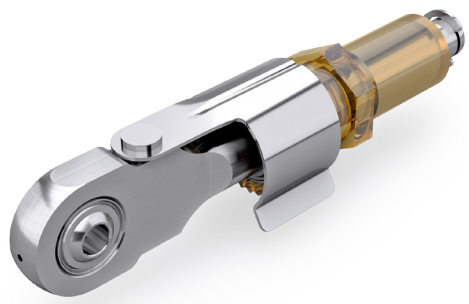

Fork end

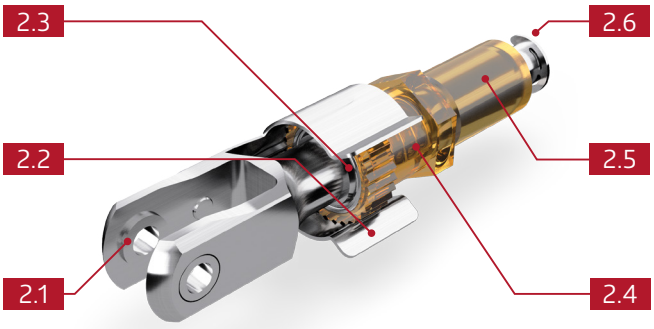

2.1

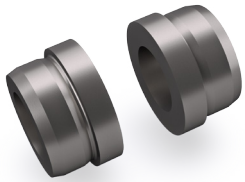

Titanium bushes

- Aids better load transmission.
- Higher surface pressure possible.
- Through change of geometry
- (boring/width) modular structure with same geometry of fork possible.

2.2

Locking clip

Quick-locking mechanism for assembly by hand. Serves as anti-twist plate and aids in transmission of loads.

2.3

Rubber ring

Prevents penetration of water and dust into rod assembly.

2.4

Spring

Links threads of threaded sleeve and fork end against each other and prevents any thread play.

2.5

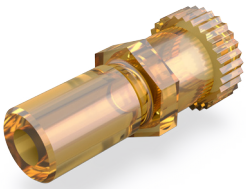

Plastic insert

Aids in transmission of loads. Plastic prevents corrosion in thread and acts as an insulator.

2.6

Safety ring

Prevents and controls too far turning off the thread.

TIE RODS ACC. TO ABS1188 GMT-NO. 650035..

Traceparts

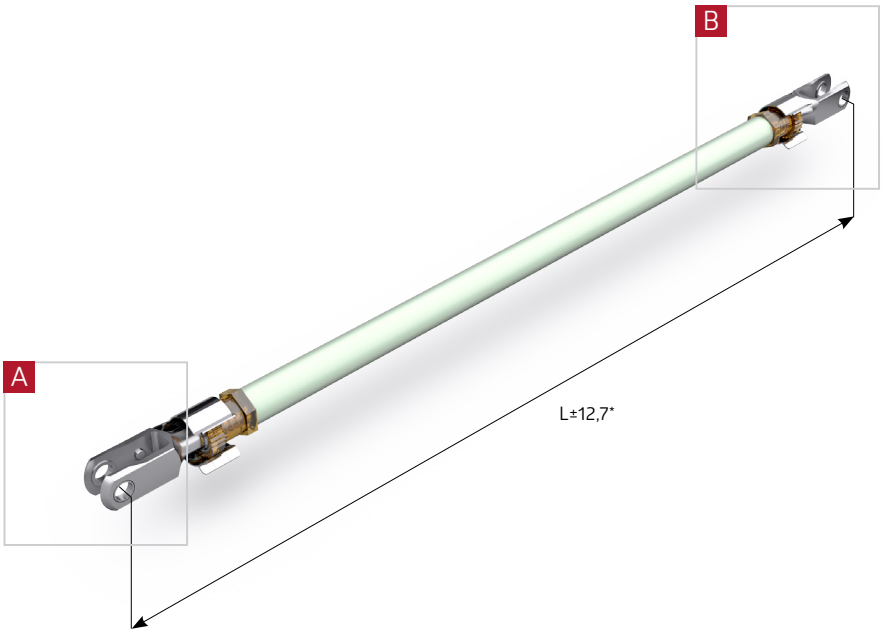

View A

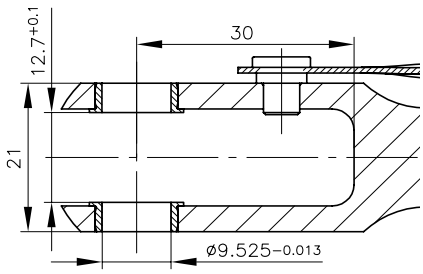

View B

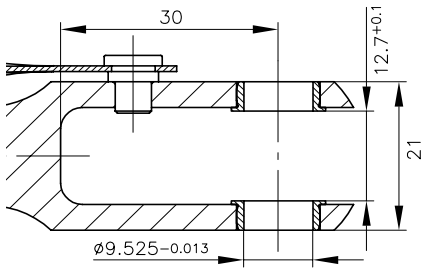

* adjustable range [mm]

ABS-no.	GMT-no.	Ultimate tension load [kN]	Ultimate compression load [kN]	Weight [g]	Rod body outer Ø [mm]	Length L [mm]	Material Rod body	Material Ends
ABS1188 A6 5650 YG	65003506	18	6	265	20	565	AL	AL
ABS1188 A6 8920 PG	65003503	18	5	565	25,4	892	AL	AL
ABS1188 A6 9100 PG	65003504	18	5	565	25,4	910	AL	AL

TIE RODS ACC. TO ABS1188 GMT-NO. 650036..

Traceparts

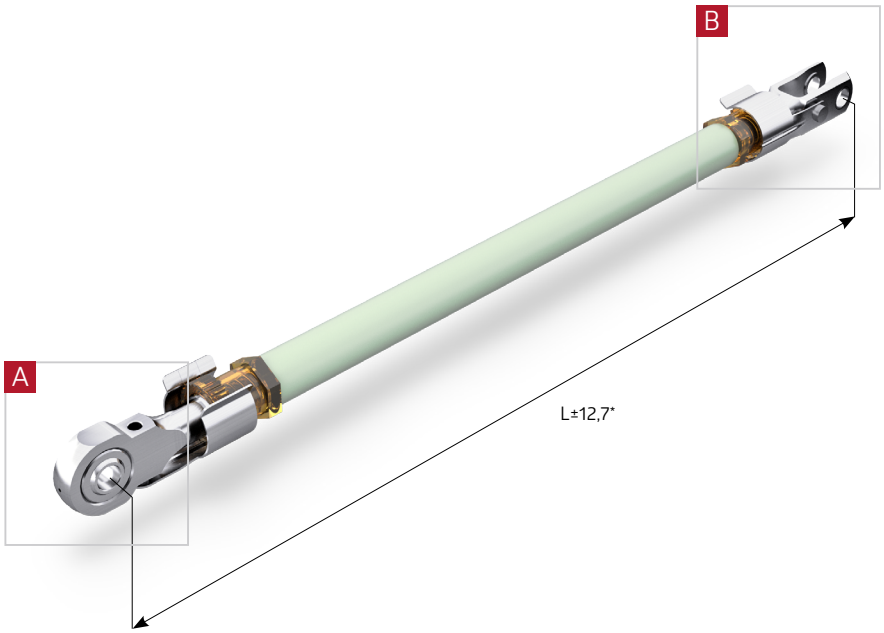

View A

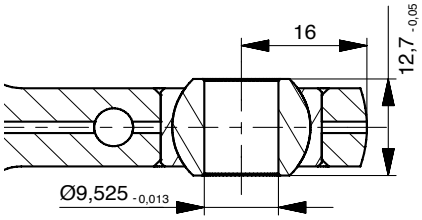

View B

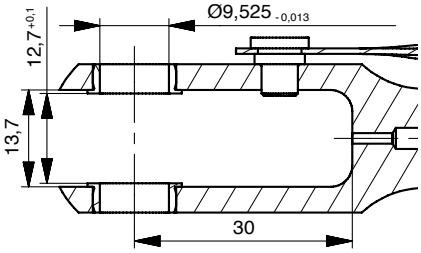

* adjustable range [mm]

ABS-no.	GMT-no.	Ultimate tension load [kN]	Ultimate compression load [kN]	Weight [g]	Rod body outer Ø [mm]	Length L [mm]	Material Rod body	Material Ends
ABS1188 B5 3310 PG	65003602	18	5	217	20	331	AL	AL
ABS1188 B5 4123 IG	65003601	18	4	243	20	412,3	AL	AL

TIE RODS ACC. TO ABS1188 GMT-NO. 65003701

Traceparts

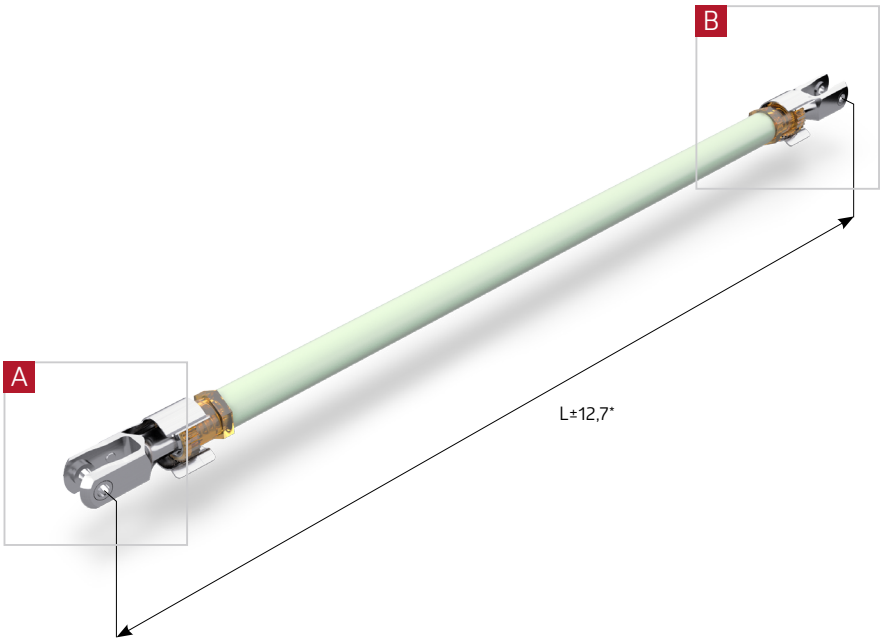

View A

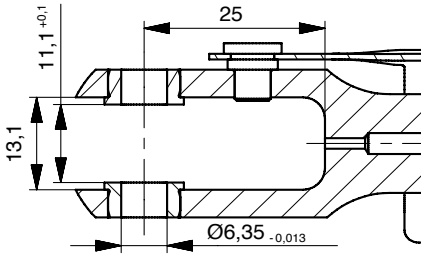

View B

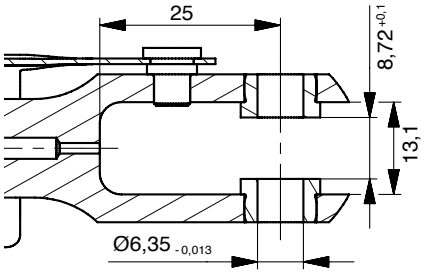

* adjustable range [mm]

ABS-no.	GMT-no.	Ultimate tension load [kN]	Ultimate compression load [kN]	Weight [g]	Rod body outer Ø [mm]	Length L [mm]	Material Rod body	Material Ends
ABS1188 A9 5620 HG	65003701	18	8	265	20	562	AL	AL

TIE RODS ACC. TO ABS1188 GMT-NO. 65003801

Traceparts

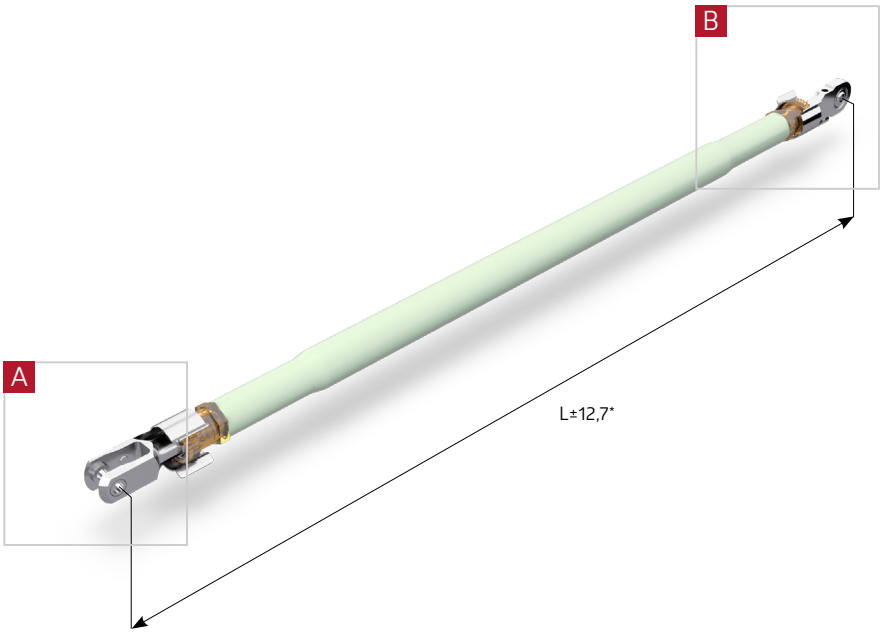

View A

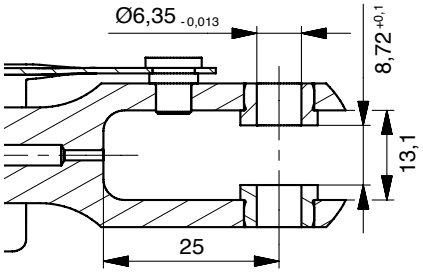

View B

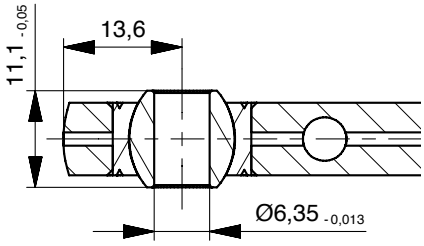

* adjustable range [mm]

ABS-no.	GMT-no.	Ultimate tension load [kN]	Ultimate compression load [kN]	Weight [g]	Rod body outer Ø [mm]	Length L [mm]	Material Rod body	Material Ends
ABS1188 B7 6455 HG	65003801	18	8	432	25,4	645,5	AL	AL

TIE RODS ACC. TO ABS1188 GMT-NO. 65003901

Traceparts

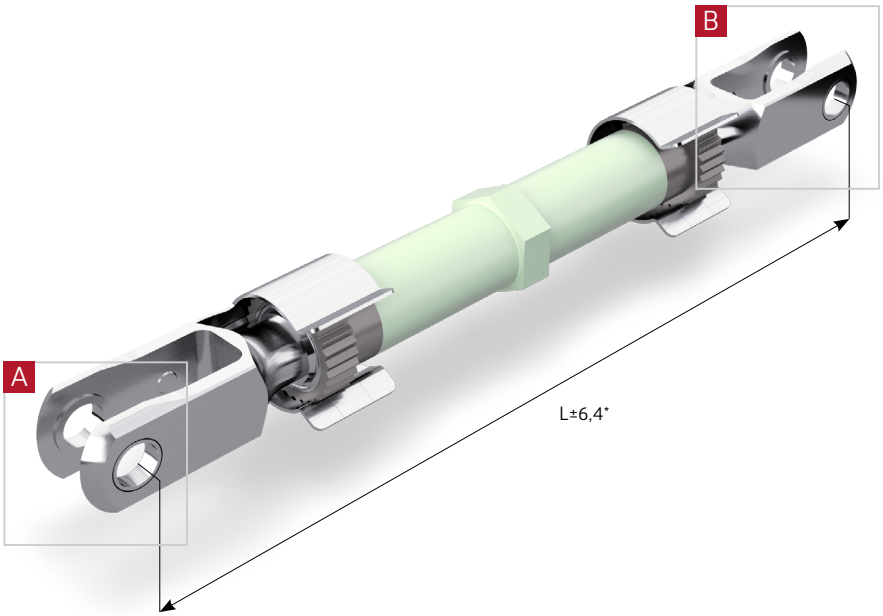

View A

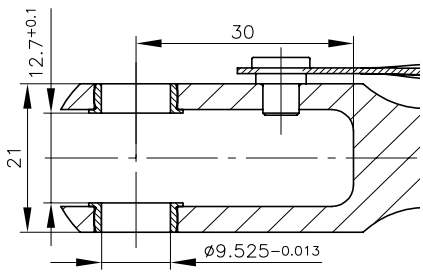

View B

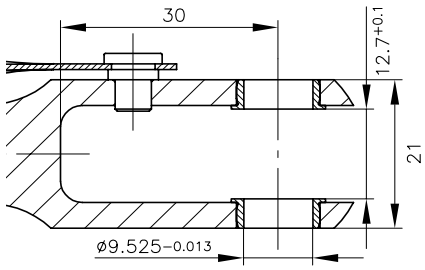

* adjustable range [mm]

ABS-no.	GMT-no.	Ultimate tension load [kN]	Ultimate compression load [kN]	Weight [g]	Rod body outer Ø [mm]	Length L [mm]	Material Rod body	Material Ends	Material threaded insert
ABS1188 A7 1750 HG	65003901	18	8	287	20	175	AL	VA	Titan

TIE RODS ACC. TO ABS1188 GMT-NO. 65005002

Traceparts

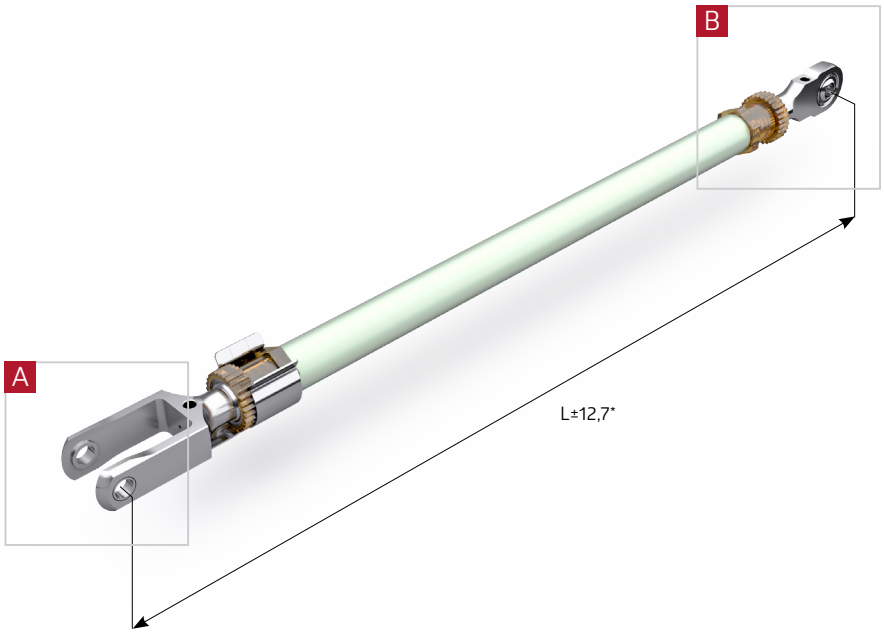

View A

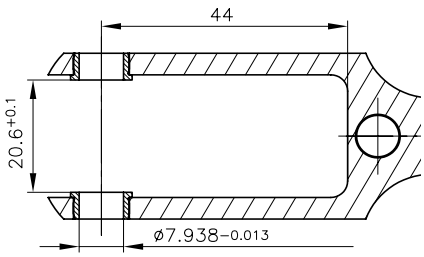

View B

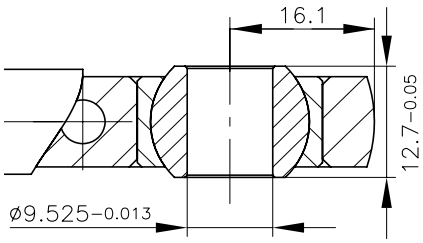

* adjustable range [mm]

ABS-no.	GMT-no.	Ultimate tension load [kN]	Ultimate compression load [kN]	Weight [g]	Rod body outer Ø [mm]	Length L [mm]	Material Rod body	Material Ends
ABS1188 C5 4500 OG	65005002	18	13	436	20	450	AL	CRES

TIE RODS ACC. TO ABS1188 GMT-NO. 650055..

Traceparts

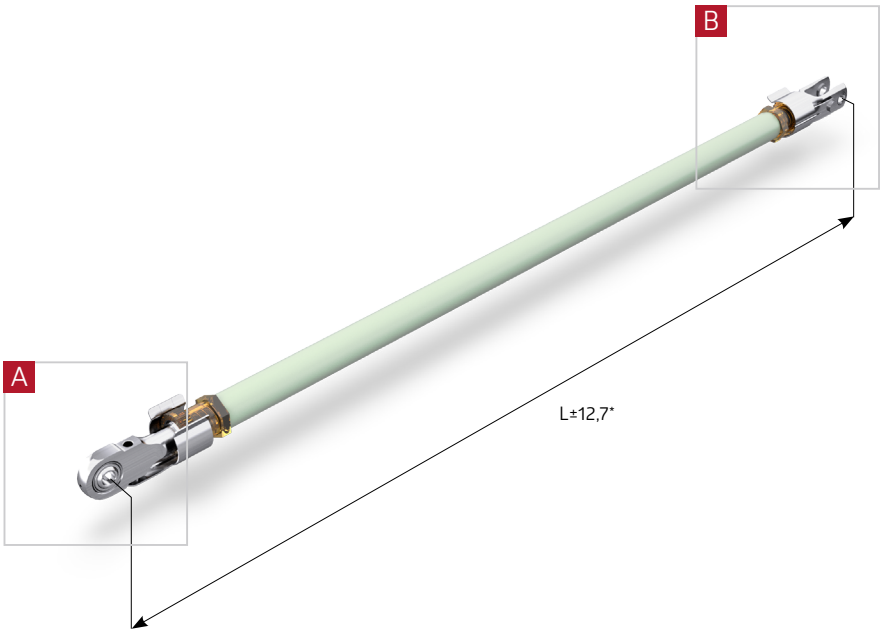

View A

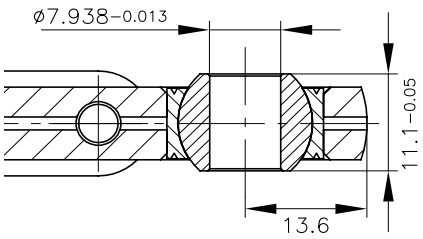

View B

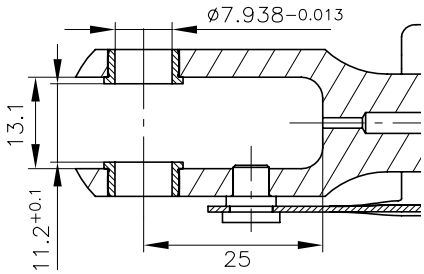

* adjustable range [mm]

ABS-no.	GMT-no.	Ultimate tension load [kN]	Ultimate compression load [kN]	Weight [g]	Rod body outer Ø [mm]	Length L [mm]	Material Rod body	Material Ends
ABS1188 C4 4310 DG	65005503	12	5	233	20	431	AL	AL
ABS1188 C4 4500 DG	65005502	12	5	240	20	450	AL	AL
ABS1188 C4 5000 DG	65005505	12	5	255	20	500	AL	AL
ABS1188 C4 6199 DG	65005504	12	5	294	20	619,9	AL	AL

TIE RODS ACC. TO ABS1188 GMT-NO. 65005601

Traceparts

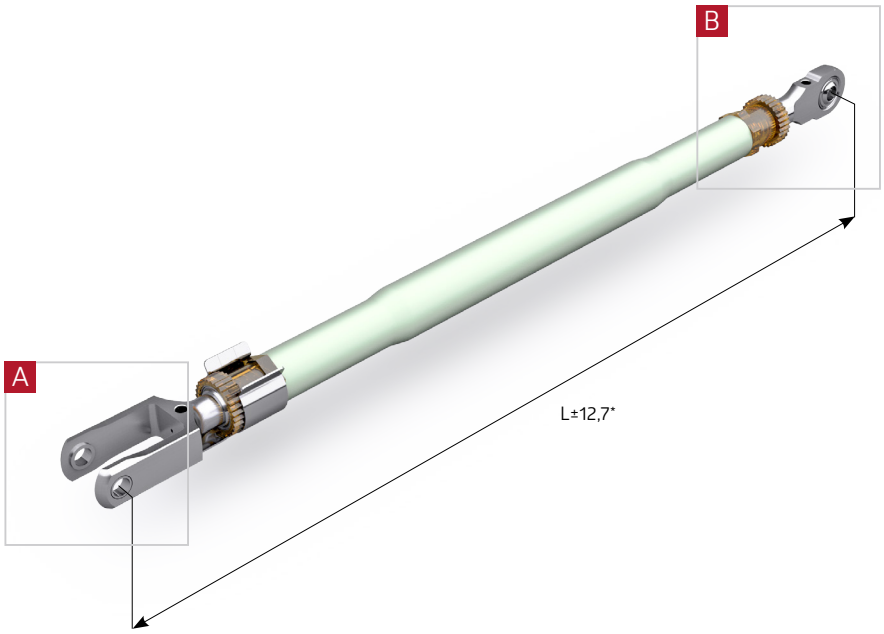

View A

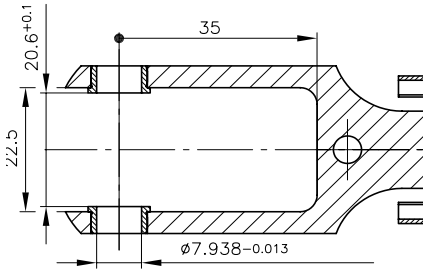

View B

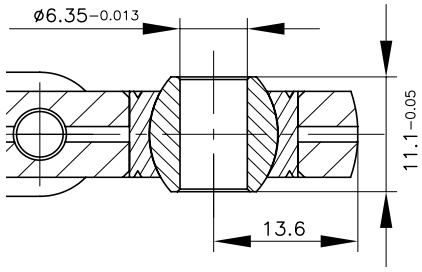

* adjustable range [mm]

ABS-no.	GMT-no.	Ultimate tension load [kN]	Ultimate compression load [kN]	Weight [g]	Rod body outer Ø [mm]	Length L [mm]	Material Rod body	Material Ends
ABS1188 C6 4500 JG	65005601	21	17	477	25,4	450	AL	CRES

TIE RODS ACC. TO ABS1188 GMT-NO. 65006001

Traceparts

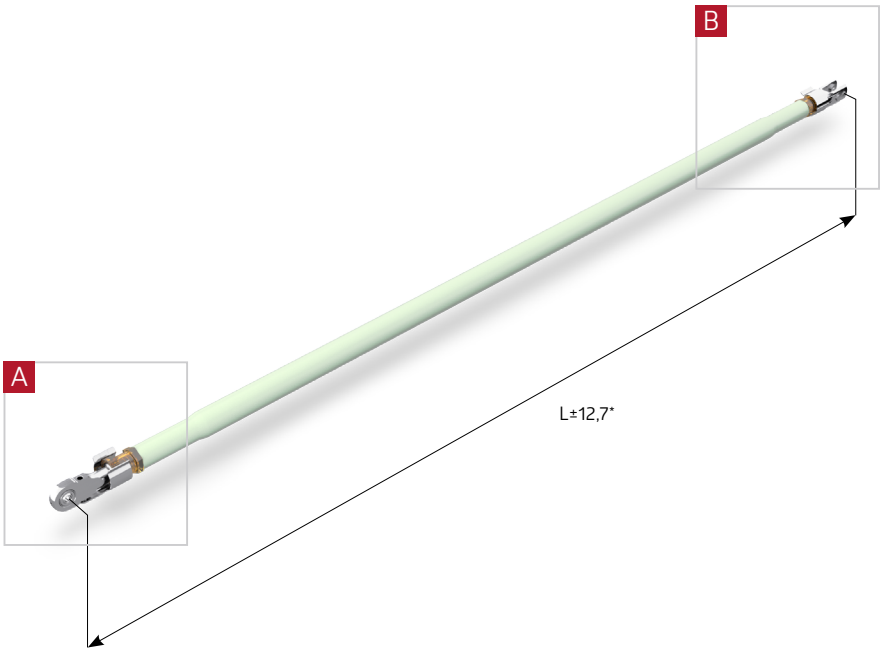

View A

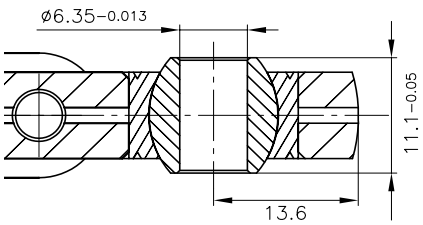

View B

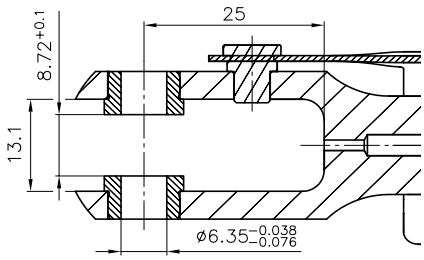

* adjustable range [mm]

ABS-no.	GMT-no.	Ultimate tension load [kN]	Ultimate compression load [kN]	Weight [g]	Rod body outer Ø [mm]	Length L [mm]	Material Rod body	Material Ends
ABS1188 E1 1100 BG	65006001	18	3	702	25,4	1100	AL	AL

TIE RODS ACC. TO ABS1188 GMT-NO. 650062..

Traceparts

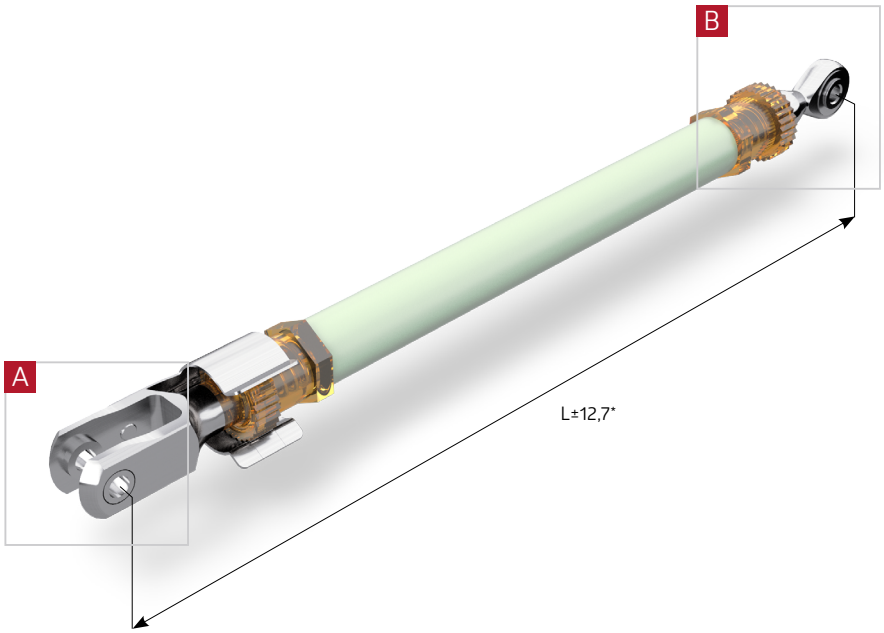

View A

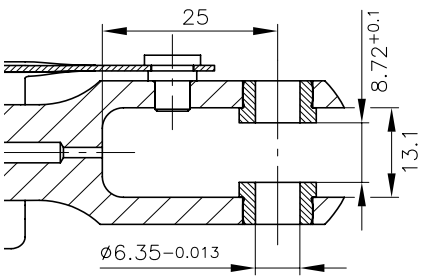

View B

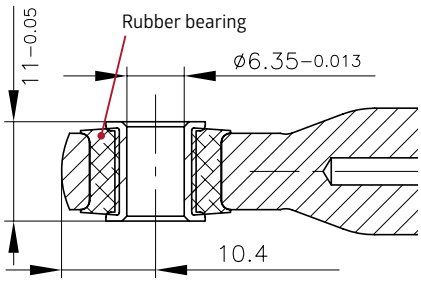

* adjustable range [mm]

ABS-no.	GMT-no.	Ultimate tension load [kN]	Ultimate compression load [kN]	Weight [g]	Rod body outer Ø [mm]	Length L [mm]	Material Rod body	Material Ends
ABS1188 B3 3070 MG	65006209	10	2	168	20	307	AL	AL
ABS1188 B3 4100 MG	65006202	10	2	201	20	410	AL	AL
ABS1188 B3 4600 MG	65006210	10	2	218	20	460	AL	AL
ABS1188 B3 4847 MG	65006208	10	2	225	20	484,7	AL	AL
ABS1188 B3 4917 MG	65006207	10	2	227	20	491,7	AL	AL
ABS1188 B3 5053 MG	65006201	10	2	231,5	20	505,3	AL	AL
ABS1188 B3 5170 MG	65006206	10	2	235	20	517	AL	AL
ABS1188 B3 5270 MG	65006205	10	2	238	20	527	AL	AL
ABS1188 B3 5340 MG	65006204	10	2	241	20	534	AL	AL
ABS1188 B3 5505 MG	65006203	10	2	246	20	550,5	AL	AL

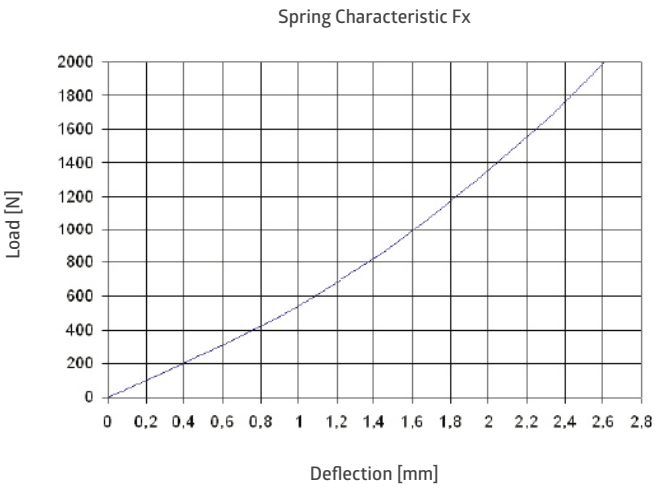

TIE RODS ACC. TO ABS1188 GMT-NO. 650072..

Traceparts

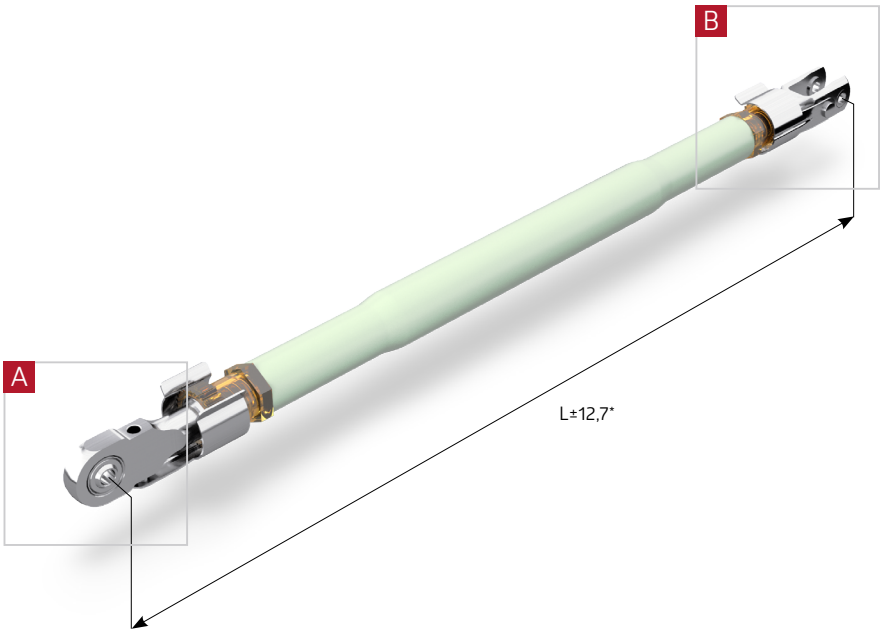

View A

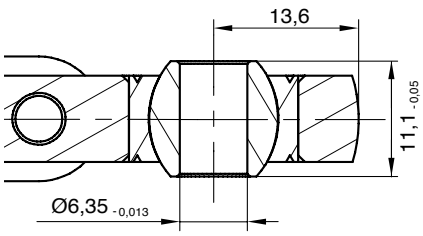

View B

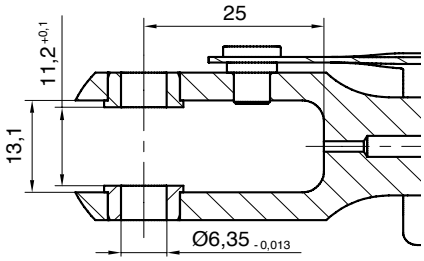

* adjustable range [mm]

ABS-no.	GMT-no.	Ultimate tension load [kN]	Ultimate compression load [kN]	Weight [g]	Rod body outer Ø [mm]	Length L [mm]	Material Rod body	Material Ends
ABS1188 F3 4400 LG	65007201	35	16	450	25,4	440	AL	CRES
ABS1188 F3 4500 LG	65007202	35	16	456	25,4	450	AL	CRES

TIE RODS ACC. TO ABS1188 GMT-NO. 650073..

Traceparts

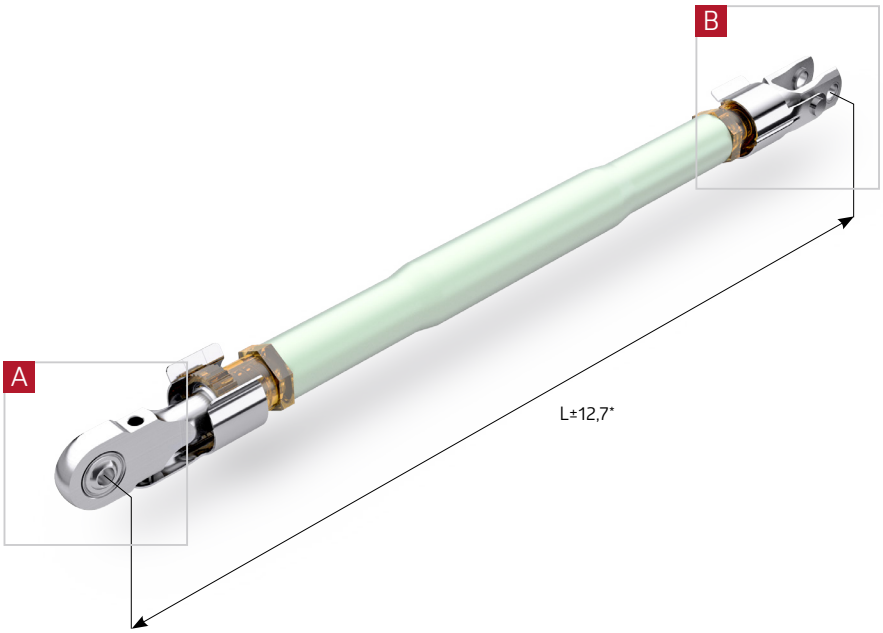

View A

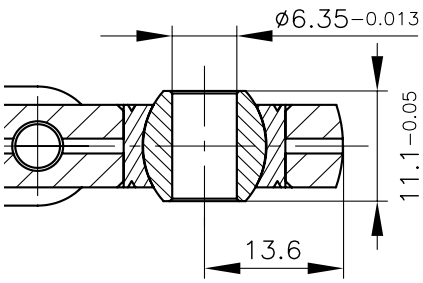

View B

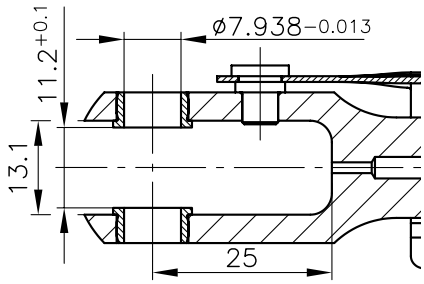

* adjustable range [mm]

ABS-no.	GMT-no.	Ultimate tension load [kN]	Ultimate compression load [kN]	Weight [g]	Rod body outer Ø [mm]	Length L [mm]	Material Rod body	Material Ends
ABS1188 F4 3800 LG	65007301	35	16	418	25,4	380	AL	CRES
ABS1188 F4 4800 LG	65007302	35	16	477	25,4	480	AL	CRES
ABS1188 F4 6000 LG	65007303	35	16	549	25,4	600	AL	CRES

TIE RODS ACC. TO ABS1188 GMT-NO. 650084..

Traceparts

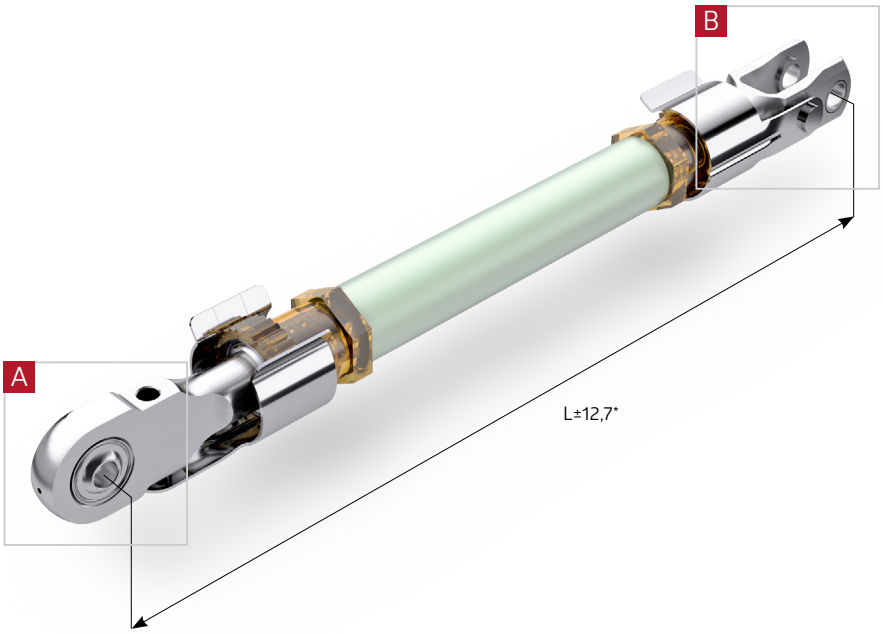

View A

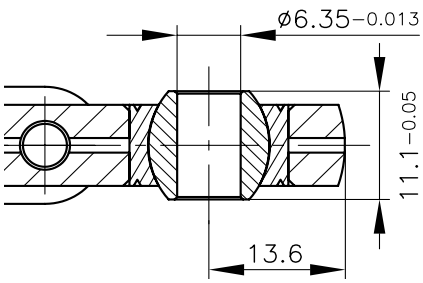

View B

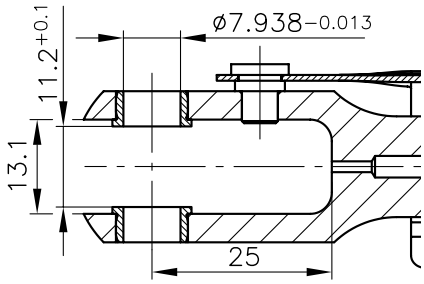

* adjustable range [mm]

ABS-no.	GMT-no.	Ultimate tension load [kN]	Ultimate compression load [kN]	Weight [g]	Rod body outer Ø [mm]	Length L [mm]	Material Rod body	Material Ends
ABS1188 C1 2500 MG	65008402	10	2	175	20	250	AL	AL
ABS1188 C1 3800 AG	65008403	8	1,6	216	20	380	AL	AL
ABS1188 C1 4100 AG	65008404	8	1,6	226	20	410	AL	AL
ABS1188 C1 8230 AG	65008401	8	1,6	257	20	823	AL	AL

TIE RODS ACC. TO ABS1188 GMT-NO. 650099..

Traceparts

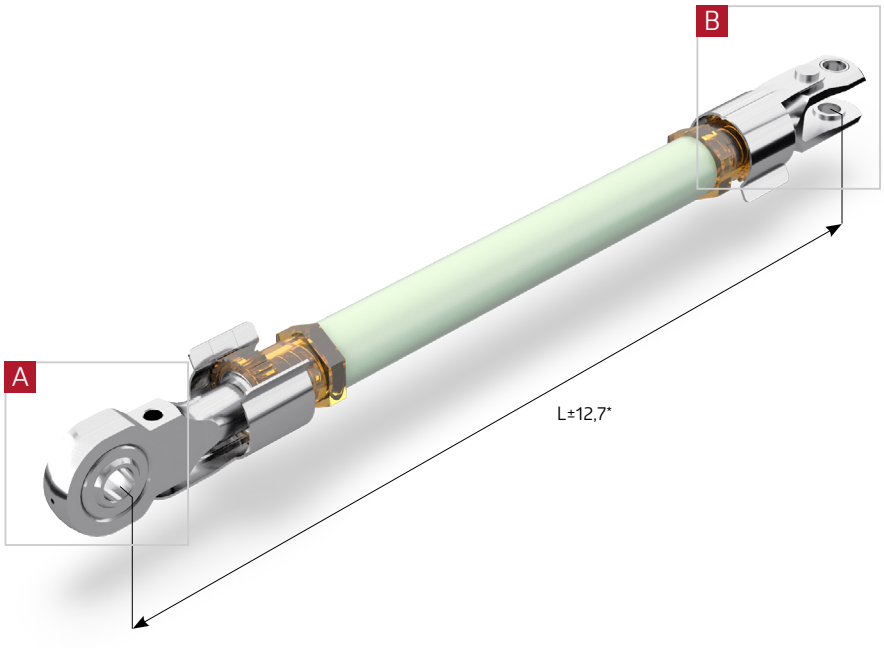

View A

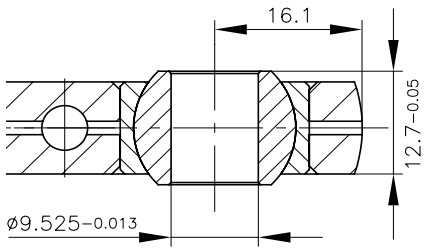

View B

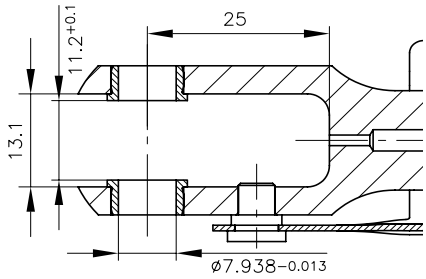

* adjustable range [mm]

ABS-no.	GMT-no.	Ultimate tension load [kN]	Ultimate compression load [kN]	Weight [g]	Rod body outer Ø [mm]	Length L [mm]	Material Rod body	Material Ends
ABS1188 B6 3000 HG	65009901	18	8	206	20	300	AL	AL
ABS1188 B6 3500 HG	65009902	18	8	222	20	350	AL	AL
ABS1188 B6 4000 HG	65009908	18	8	239	20	400	AL	AL
ABS1188 B6 4250 HG	65009903	18	8	247	20	425	AL	AL
ABS1188 B6 4500 HG	65009907	18	8	255	20	450	AL	AL
ABS1188 B6 5000 HG	65009904	18	8	271	20	500	AL	AL
ABS1188 B6 5500 HG	65009905	18	8	285	20	550	AL	AL
ABS1188 B6 7360 HG	65009906	18	8	499	25,4	736	AL	AL

TIE RODS ACC. TO ABS1188 GMT-NO. 650100..

Traceparts

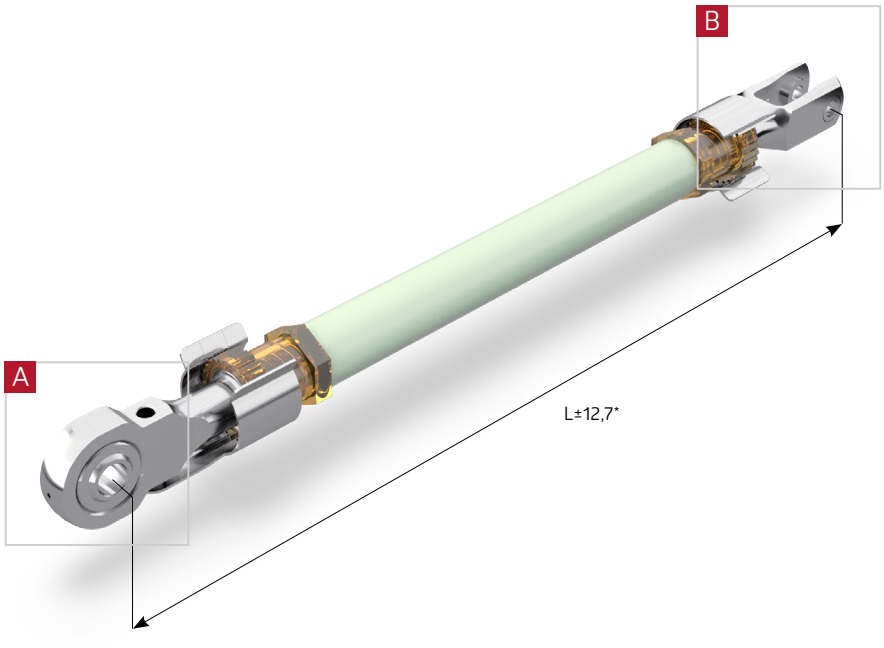

View A

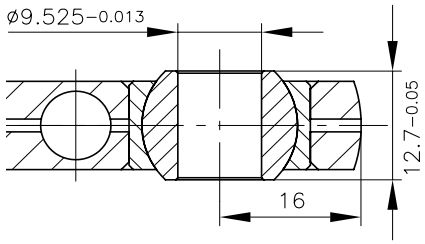

View B

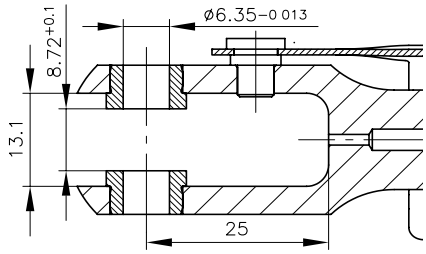

* adjustable range [mm]

ABS-no.	GMT-no.	Ultimate tension load [kN]	Ultimate compression load [kN]	Weight [g]	Rod body outer Ø [mm]	Length L [mm]	Material Rod body	Material Ends
ABS1188 F1 3050 HG	65010007	18	8	209	20	305	AL	AL
ABS1188 F1 3100 HG	65010004	18	8	211	20	310	AL	AL
ABS1188 F1 4200 HG	65010001	18	8	246	20	420	AL	AL
ABS1188 F1 4500 HG	65010005	18	8	255	20	450	AL	AL
ABS1188 F1 4560 HG	65010002	18	8	257	20	456	AL	AL
ABS1188 F1 4900 HG	65010003	18	8	268	20	490	AL	AL
ABS1188 F1 5050 HG	65010006	18	8	273	20	505	AL	AL

TIE RODS ACC. TO ABS1188 GMT-NO. 650106..

Traceparts

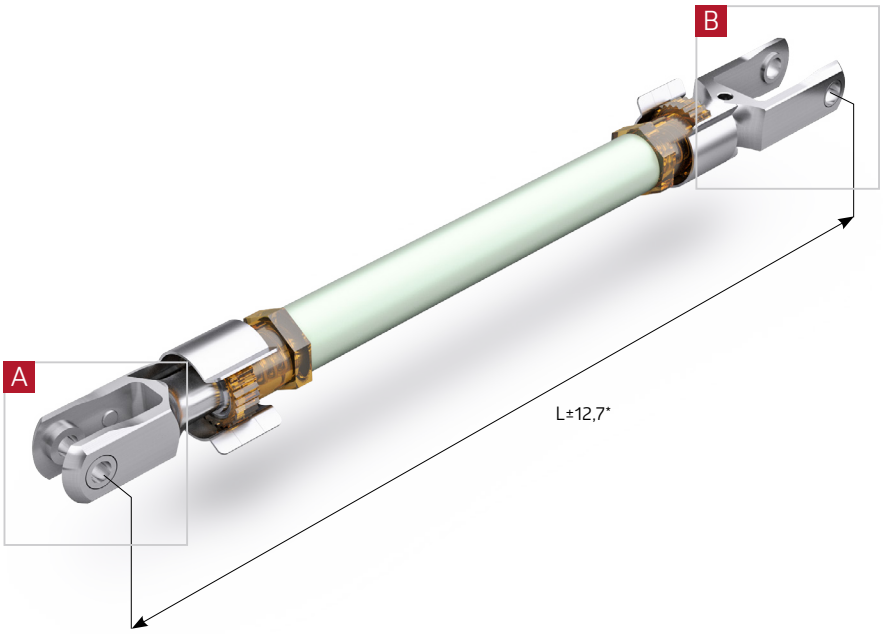

View A

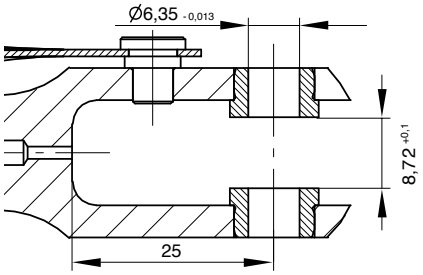

View B

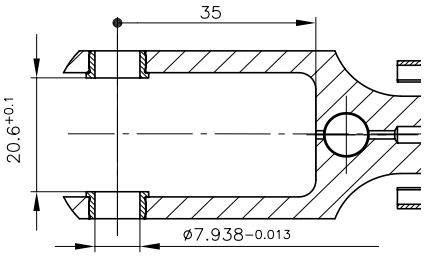

* adjustable range [mm]

ABS-no.	GMT-no.	Ultimate tension load [kN]	Ultimate compression load [kN]	Weight [g]	Rod body outer Ø [mm]	Length L [mm]	Material Rod body	Material Ends
ABS1188 A1 3035 VG	65010601	14	4	186	20	303,5	AL	AL
ABS1188 A1 3240 VG	65010602	14	4	193	20	324	AL	AL
ABS1188 A1 4530 VG	65010603	14	4	234	20	453	AL	AL
ABS1188 A1 4730 PG	65010604	18	5	240	20	473	AL	AL

TIE RODS ACC. TO ABS1188 GMT-NO. 650107..

Traceparts

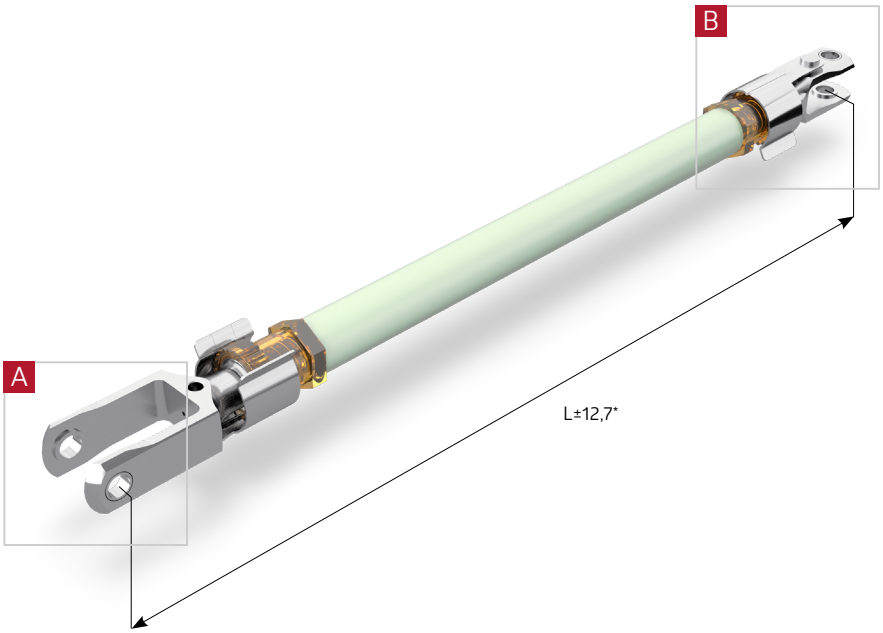

View A

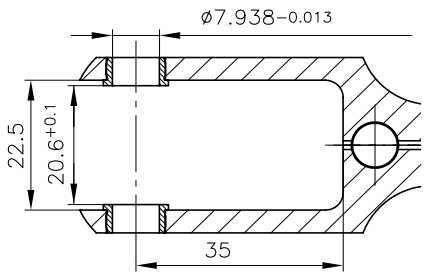

View B

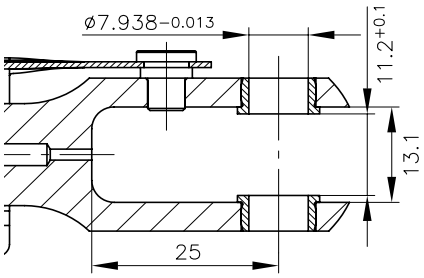

* adjustable range [mm]

ABS-no.	GMT-no.	Ultimate tension load [kN]	Ultimate compression load [kN]	Weight [g]	Rod body outer Ø [mm]	Length L [mm]	Material Rod body	Material Ends
ABS1188 A2 3770 VG	65010701	14	4	208	20	377	AL	AL
ABS1188 A2 3940 VG	65010702	14	4	213	20	394	AL	AL
ABS1188 A2 5275 VG	65010703	14	4	256	20	527,5	AL	AL

TIE RODS ACC. TO ABS1188 GMT-NO. 650121..

Traceparts

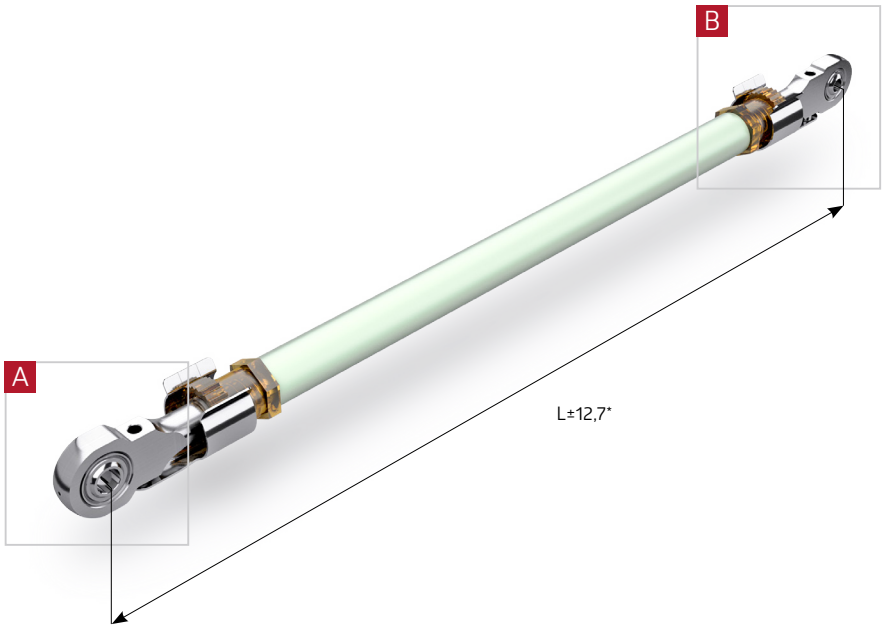

View A

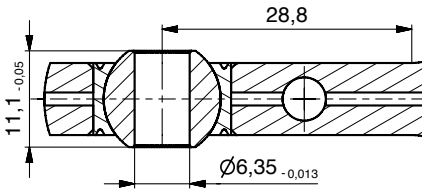

View B

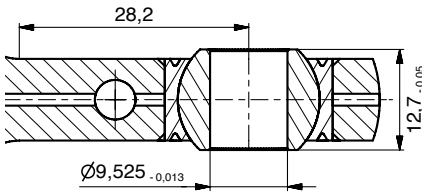

* adjustable range [mm]

ABS-no.	GMT-no.	Ultimate tension load [kN]	Ultimate compression load [kN]	Weight [g]	Rod body outer Ø [mm]	Length L [mm]	Material Rod body	Material Ends
ABS1188 F6 3050 HG	65012102	18	8	227	20	305	AL	AL
ABS1188 F6 4200 HG	65012101	18	8	264	20	420	AL	AL

DESCRIPTION TO TIE RODS ABS1187

Applicable for interior fittings and mounting of units in fuselage and cabin, also usable as structure part. Is used where short components are requested.

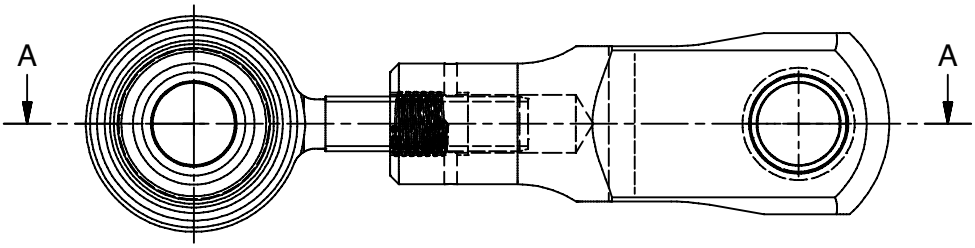

A-A (2 : 1)

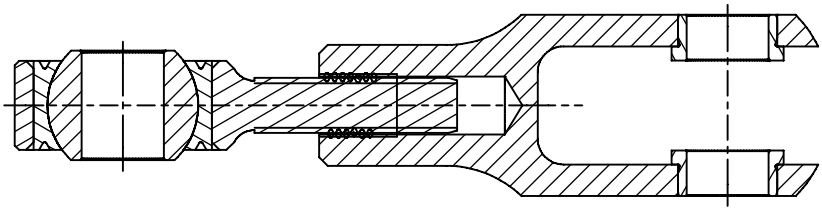

Advantage:

1. Bolt for load transmission is integrated in the locking element.
2. No longitudinal locking due to helicoil thread insert with screw lock is used.
3. Fork end with titan bushings for flexible design by modification of the titan bushings with equal fork geometry.
4. Fork end with titan bushings avoids problems with corrosion for contact with carbon fibre or aluminium parts.

Designation

Description block	Identity block					
Tie rod	ABS1187	A	6120	G	P	X

Number of this standard
Assembly code:
Size code:
Type code:
Fatigue Load category:
Diameter code:

COMPONENTS OF TIE RODS ABS1187

Components and their function

Rod end

Fork end

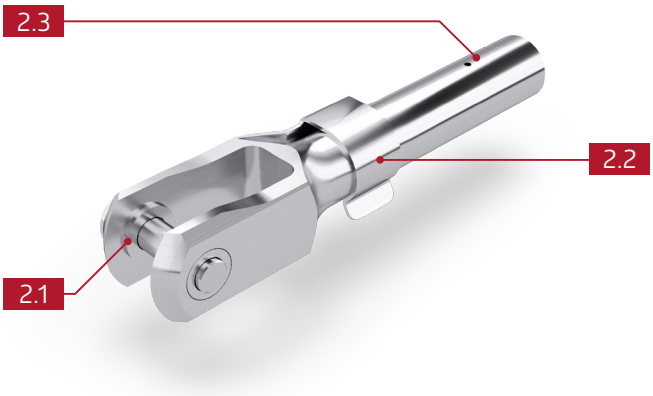

2.1

Bushes

- Aids better load transmission.
- Higher surface pressure possible.
- Through change of geometry
- (boring/width) modular structure with same geometry of fork possible.

2.2

Locking clip

Quick-locking mechanism for assembly by hand. Serves as anti-twist plate and aids in transmission of loads.

2.3

Threaded insert with screw locking

Links threads of threaded sleeve and fork end against each other and prevents any thread paly.

TIE RODS ACC. TO ABS1187 GMT-NO. 650019..

Traceparts

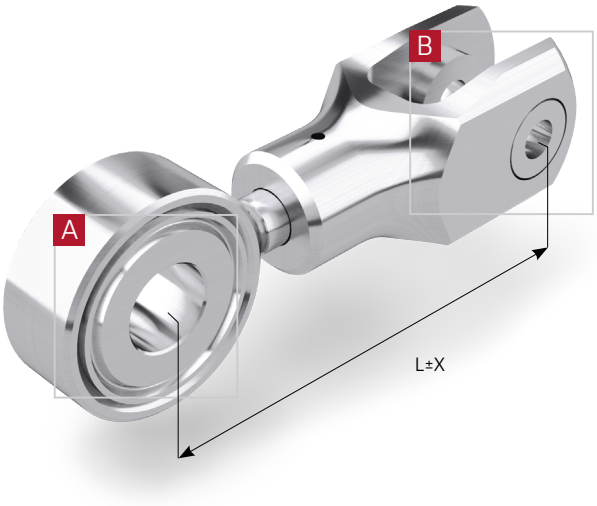

View A

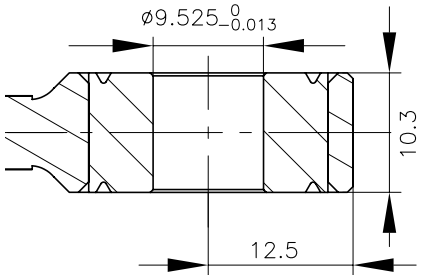

View B

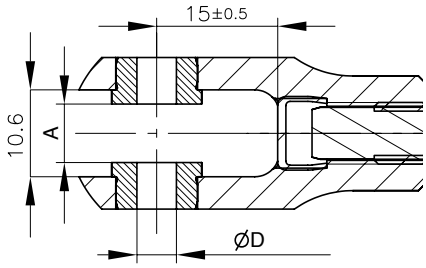

ABS-no.	GMT-no.	Adjustable range X [mm]	Ø D [mm] -0,038 -0,076	A [mm] +0,1 0	Ultimate tension load [kN]	Ultimate compres-sion load [kN]	Weight [g]	Rod body outer Ø [mm]	Length L [mm]	Material Fork End B	Material Rod End A
ABS1187 B 5120 GRX	65001904	+7,0 -3,5	4,83	7,15	3	3	56	14	51,2	AL	CRES
ABS1187 B 6120 GRY	65001903	±7,0	6,35	8,72	3	3	58	14	61,2	AL	CRES
ABS1187 B 6120 GRX	65001908	±7,0	4,83	7,15	3	3	59	14	61,2	AL	CRES

TIE RODS ACC. TO ABS1187 GMT-NO. 650063..

Traceparts

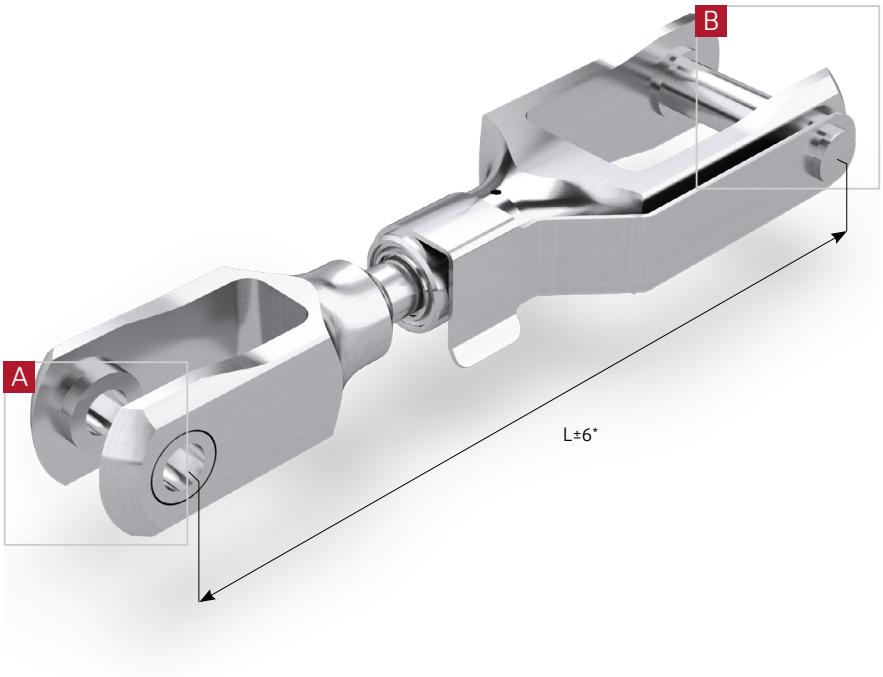

View A

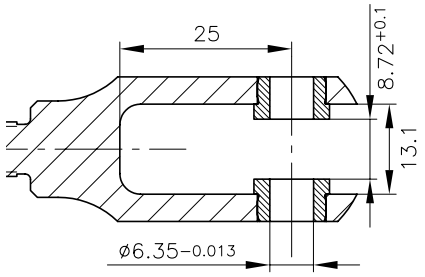

View B

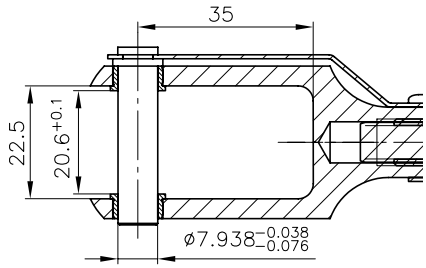

* adjustable range [mm]

ABS-no.	GMT-no.	Ultimate tension load [kN]	Ultimate compression load [kN]	Weight [g]	Rod body outer Ø [mm]	Length L [mm]	Material Fork End B	Material Fork End A
ABS1187 E 1130 GSY	65006305	20	7,5	121	14	113	AL	CRES
ABS1187 E 1230 GSY	65006301	20	7,5	123	14	123	AL	CRES
ABS1187 E 1280 GSY	65006302	20	7,5	124	14	128	AL	CRES
ABS1187 E 1380 GSY	65006303	20	7,5	128	14	138	AL	CRES
ABS1187 E 1480 GSY	65006304	20	7,5	132	14	148	AL	CRES

TIE RODS ACC. TO ABS1187 GMT-NO. 65007401

Traceparts

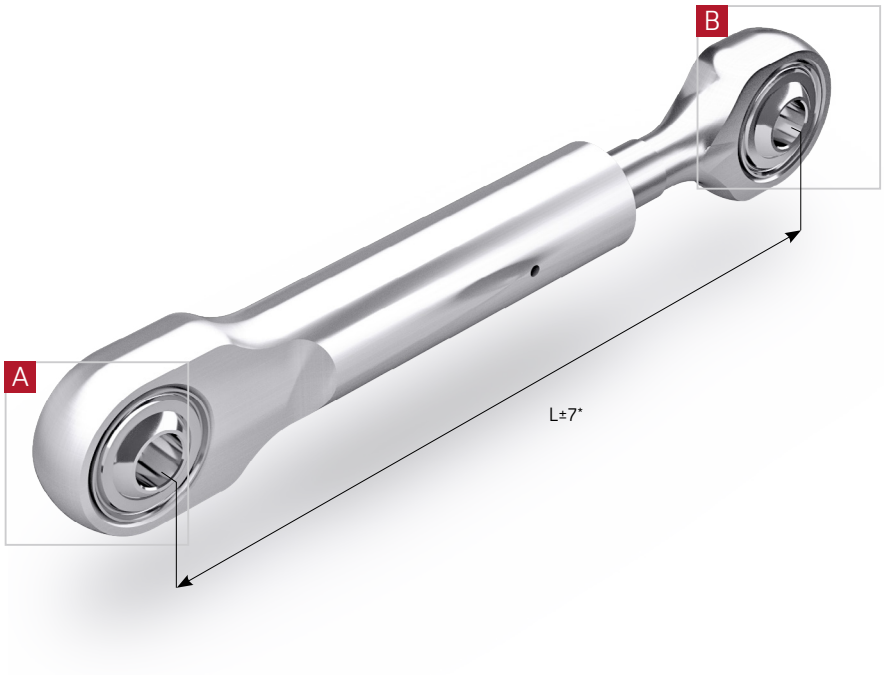

View A

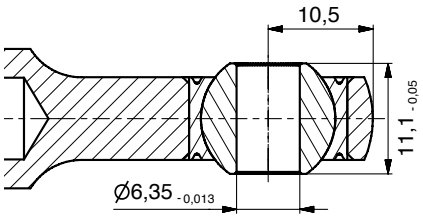

View B

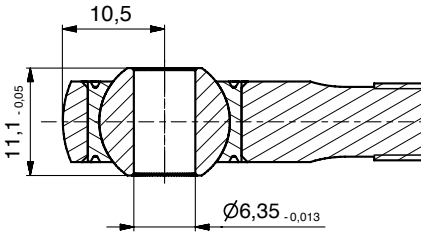

* adjustable range [mm]

ABS-no.	GMT-no.	Ultimate tension load [kN]	Ultimate compression load [kN]	Weight [g]	Rod body outer Ø [mm]	Length L [mm]	Material Rod end A	Material Rod end B
ABS1187 F 1025 GPY	65007401	14	17	79	14	102,5	AL	CRES

TIE RODS ACC. TO ABS1187 GMT-NO. 650119..

Traceparts

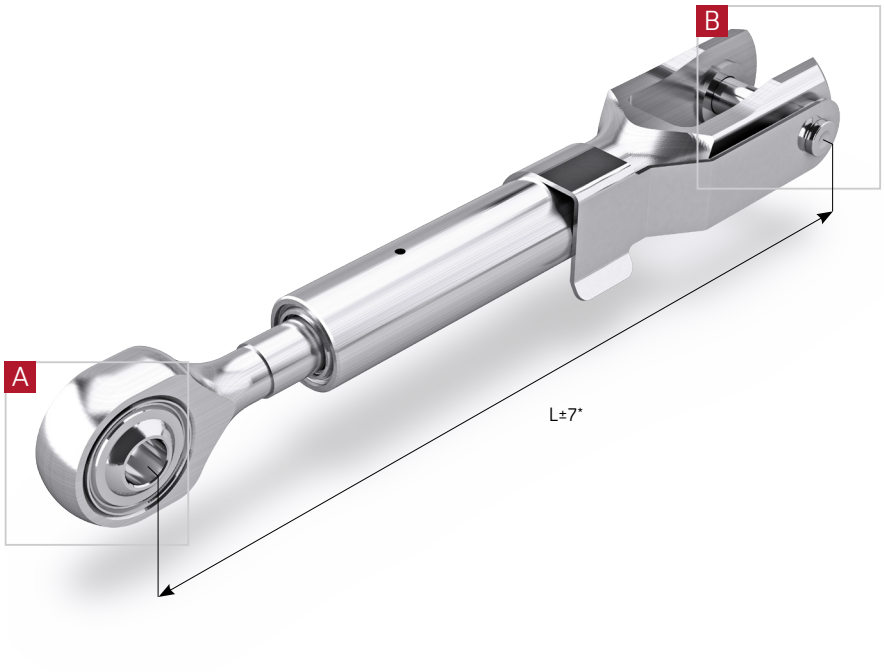

View A

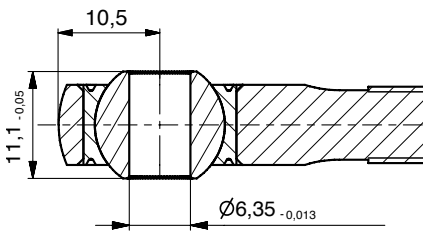

View B

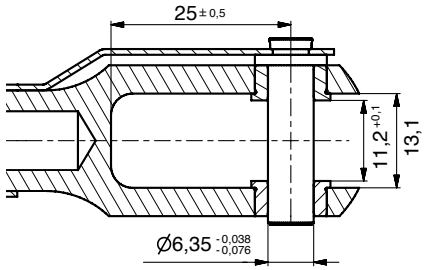

* adjustable range [mm]

ABS-no.	GMT-no.	Ultimate tension load [kN]	Ultimate compression load [kN]	Weight [g]	Rod body outer Ø [mm]	Length L [mm]	Material Fork end B	Material Rod end A
ABS1187 D 1250 GPY	65011901	14	17	94	14	125	AL	CRES
ABS1187 D 2130 GPY	65011902	14	17	118	14	213	AL	CRES
ABS1187 D 2420 GPY	65011903	14	17	126	14	242	AL	CRES
ABS1187 D 0980 GPY	65011904	14	17	83	14	98	AL	CRES

TIE RODS ACC. TO ABS1187 GMT-NO. 65012301

Traceparts

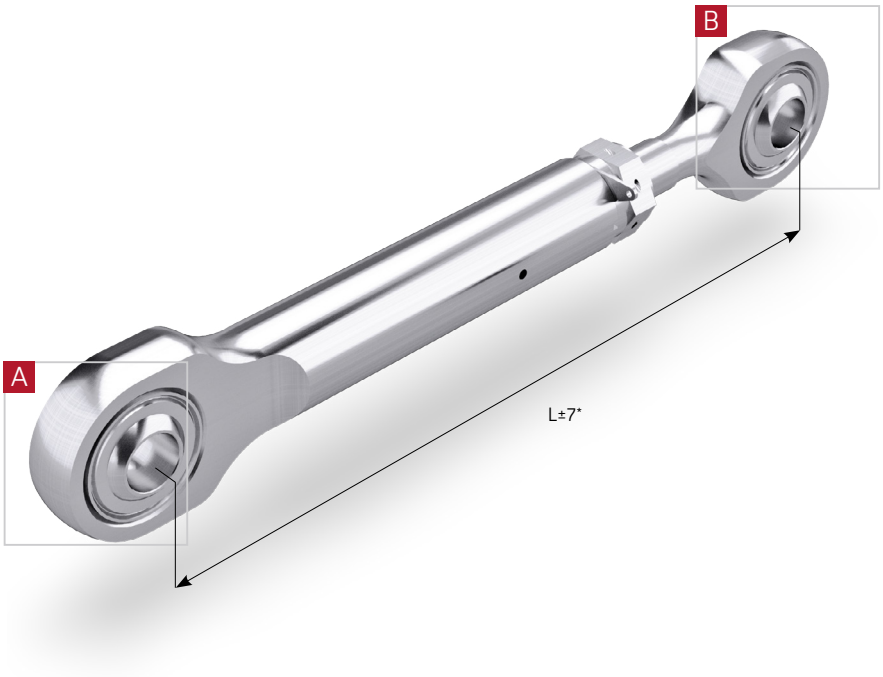

View A

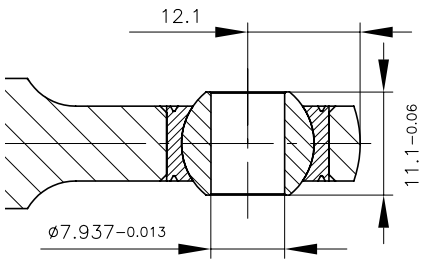

View B

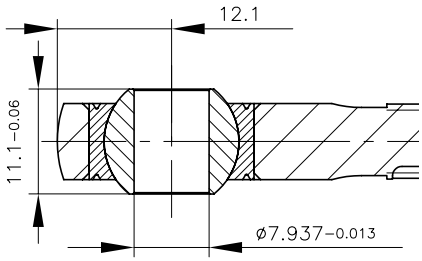

* adjustable range [mm]

ABS-no.	GMT-no.	Ultimate tension load [kN]	Ultimate compression load [kN]	Weight [g]	Rod body outer Ø [mm]	Length L [mm]	Material Rod End A	Material Rod End B
ABS1187 G 1200 GTY	65012301	14	17	99	14	120	AL	CRES

TIE RODS ACC. TO ABS1187 GMT-NO. 65014201

Traceparts

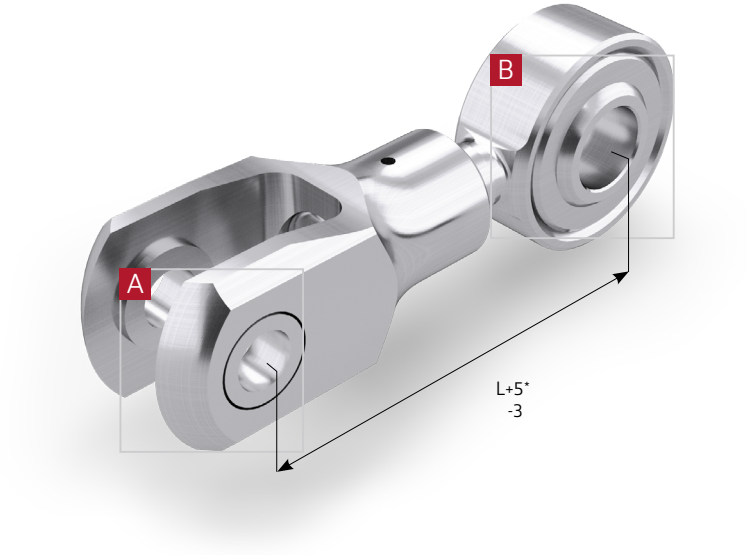

View A

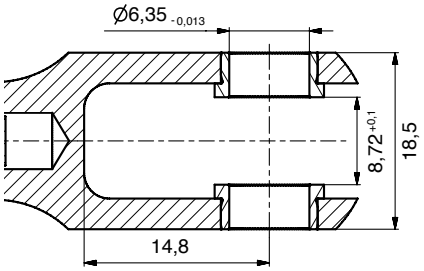

View B

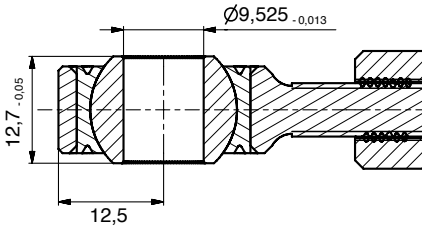

* adjustable range [mm]

ABS-no.	GMT-no.	Ultimate tension load [kN]	Ultimate compression load [kN]	Weight [g]	Rod body outer Ø [mm]	Length L [mm]	Material Fork End A	Material Rod End B
ABS1187 T 5120 GUY	65014201	14	17	60	14	512	AL	CRES

TIE RODS ACC. TO ABS1187 GMT-NO. 65016201

Traceparts

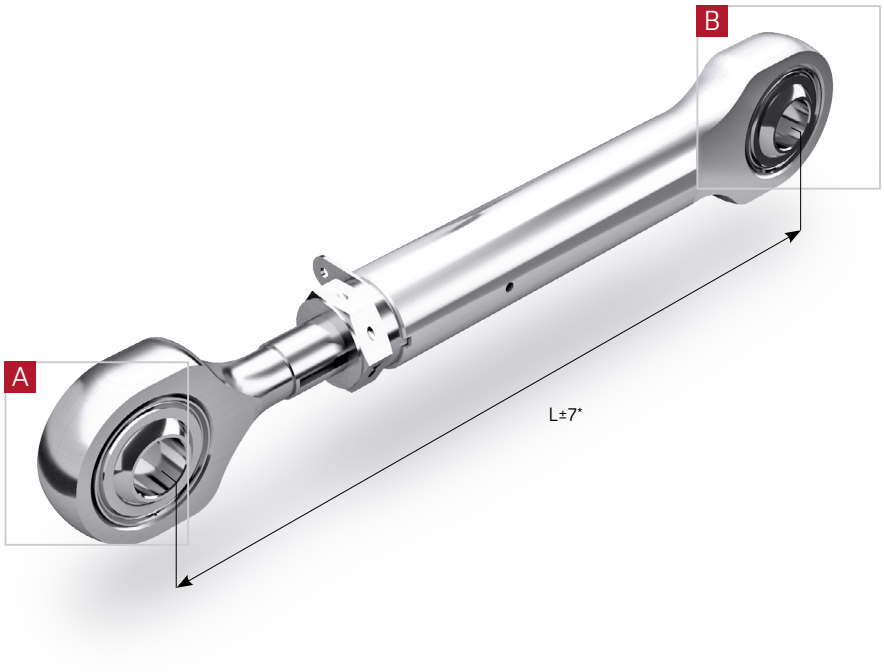

View A

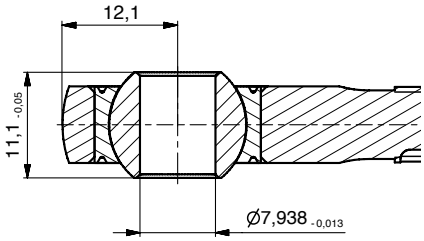

View B

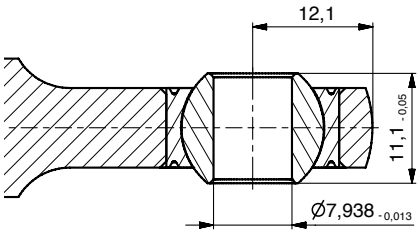

* adjustable range [mm]

ABS-no.	GMT-no.	Ultimate tension load [kN]	Ultimate compression load [kN]	Weight [g]	Rod body outer Ø [mm]	Length L [mm]	Material Rod end B	Material Rod end A
ABS1187 N 1200 GLY	65016201	21	17	96	14	120	AL	CRES

TIE RODS ACC. TO ABS1187 GMT-NO. 65018001, 65020601

Traceparts

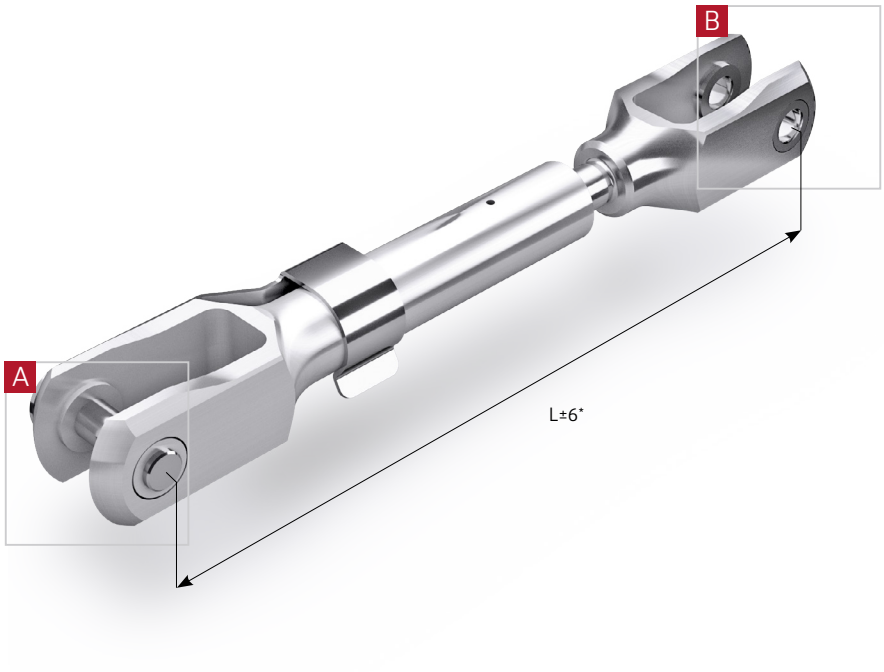

View A

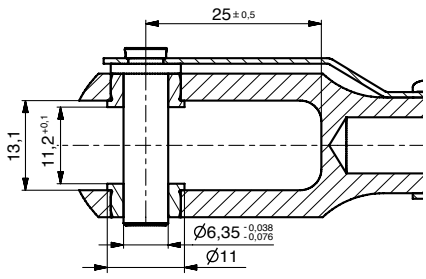

View B

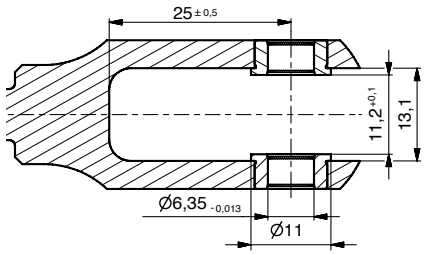

* adjustable range [mm]

ABS-no.	GMT-no.	Ultimate tension load [kN]	Ultimate compression load [kN]	Weight [g]	Rod body outer Ø [mm]	Length L [mm]	Material Fork end A	Material Fork end B
ABS1187 H 1400 GSY	65018001	20	7,5	116	14	140	AL	CRES
ABS1187 H 1400 GXY	65020601	20	7,5	116	14	140	AL	CRES

TIE RODS ACC. TO ABS1187 GMT-NO. 65018401

Traceparts

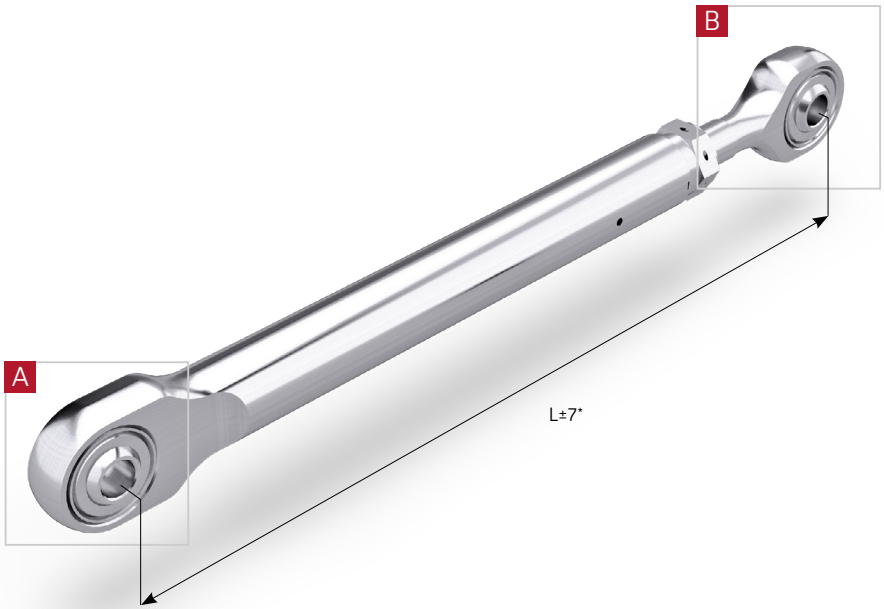

View A

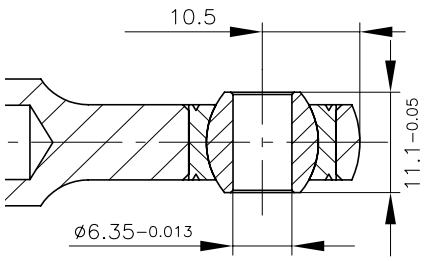

View B

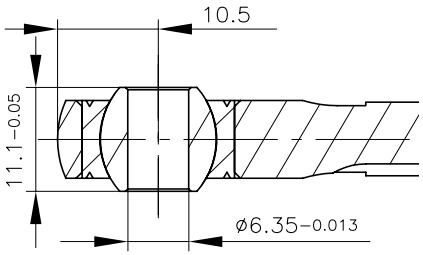

* adjustable range [mm]

ABS-no.	GMT-no.	Ultimate tension load [kN]	Ultimate compression load [kN]	Weight [g]	Rod body outer Ø [mm]	Length L [mm]	Material Rod End A	Material Rod End B
ABS1187 K 1650 GWY	65018401	14	7,5	103	14	165	AL	CRES

TIE RODS ACC. TO ABS1187 GMT-NO. 650185..

Traceparts

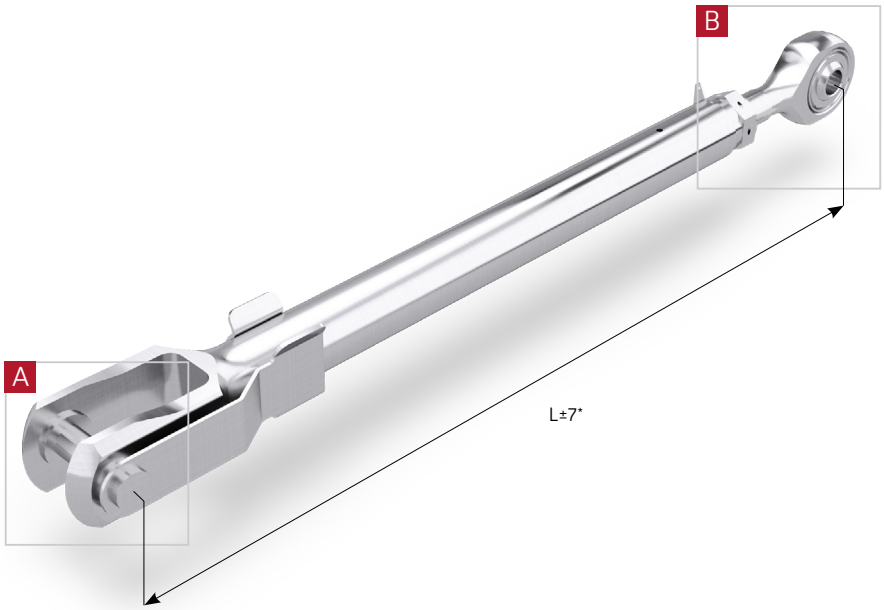

View A

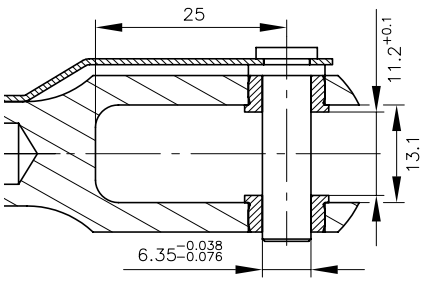

View B

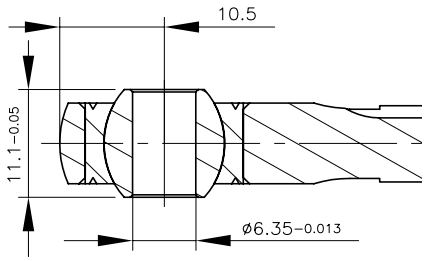

* adjustable range [mm]

ABS-no.	GMT-no.	Ultimate tension load [kN]	Ultimate compression load [kN]	Weight [g]	Rod body outer Ø [mm]	Length L [mm]	Material Fork End A	Material Rod End B
ABS1187 J 2130 GWY	65018501	14	7,5	124	14	213	AL	CRES
ABS1187 J 2420 GWY	65018502	14	7,5	136	14	242	AL	CRES

TIE RODS ACC. TO ABS1187 GMT-NO. 650204..

Traceparts

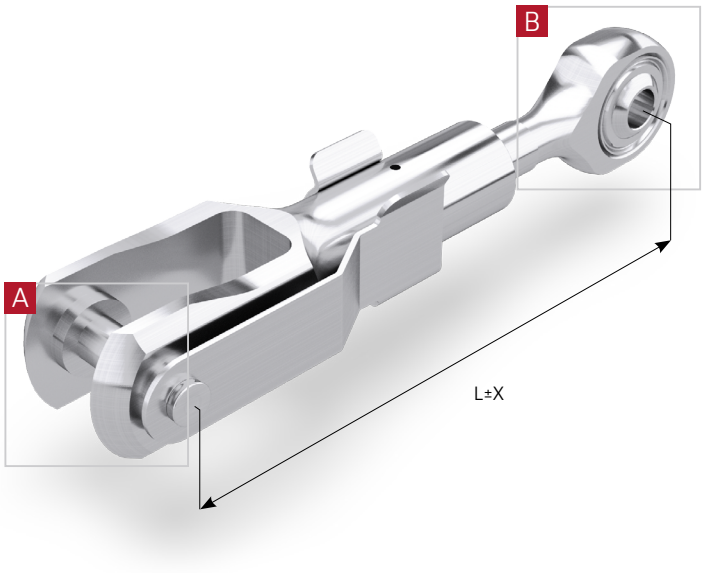

View A

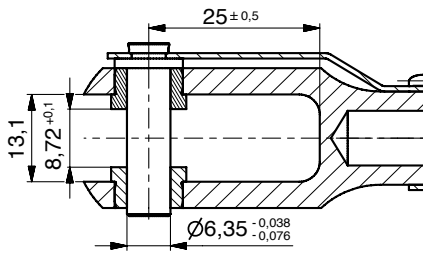

View B

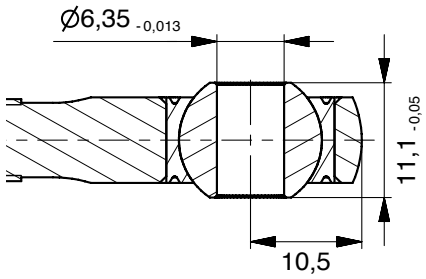

ABS-no.	GMT-no.	Adjustable range X [mm]	Ultimate tension load [kN]	Ultimate compression load [kN]	Weight [g]	Rod body outer Ø [mm]	Length L [mm]	Material Fork End A	Material Rod End B
ABS1187 L 0957 GSY	65020402	±6,4	20	7,5	83	14	95,7	AL	CRES
ABS1187 L 1125 GSY	65020403	±12,7	20	7,5	91	14	112,5	AL	CRES
ABS1187 L 1500 GPY	65020401	±15	14	17	105	14	150	AL	CRES
ABS1187 L 3600 GSY	65020404	±15	20	7,5	180	14	360	AL	CRES

TIE RODS ACC. TO ABS1187 GMT-NO. 65020501

Traceparts

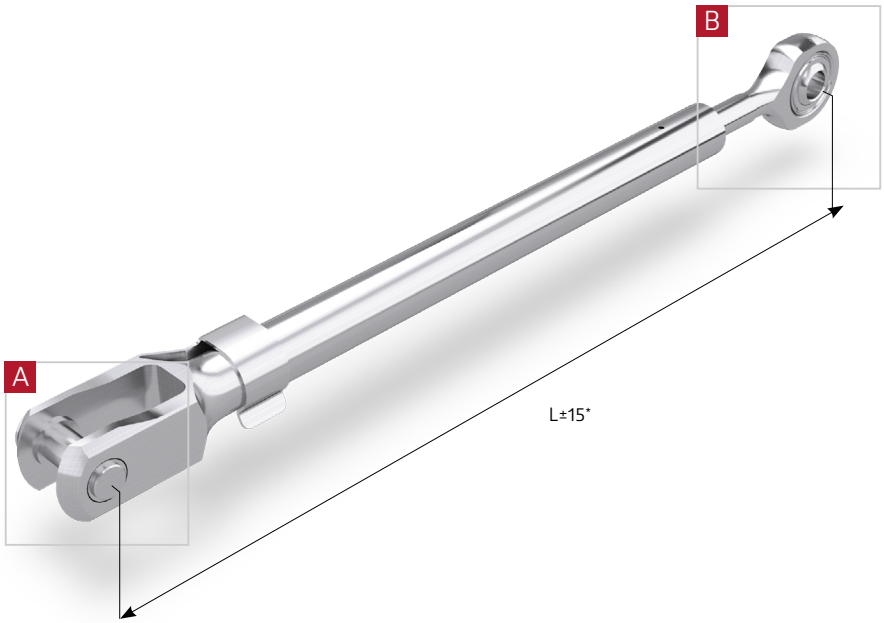

View A

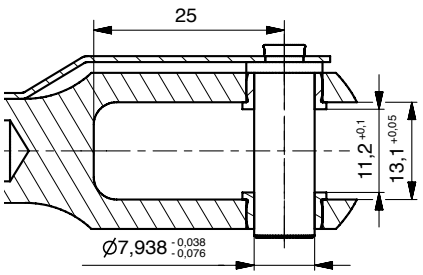

View B

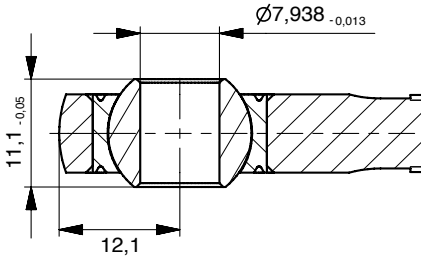

* adjustable range [mm]

ABS-no.	GMT-no.	Ultimate tension load [kN]	Ultimate compression load [kN]	Weight [g]	Rod body outer Ø [mm]	Length L [mm]	Material Fork End A	Material Rod End B
ABS1187 M 2350 GSY	65020501	20	7,5	135	14	235	AL	CRES

TIE RODS ACC. TO ABS1187 GMT-NO. 650342..

Traceparts

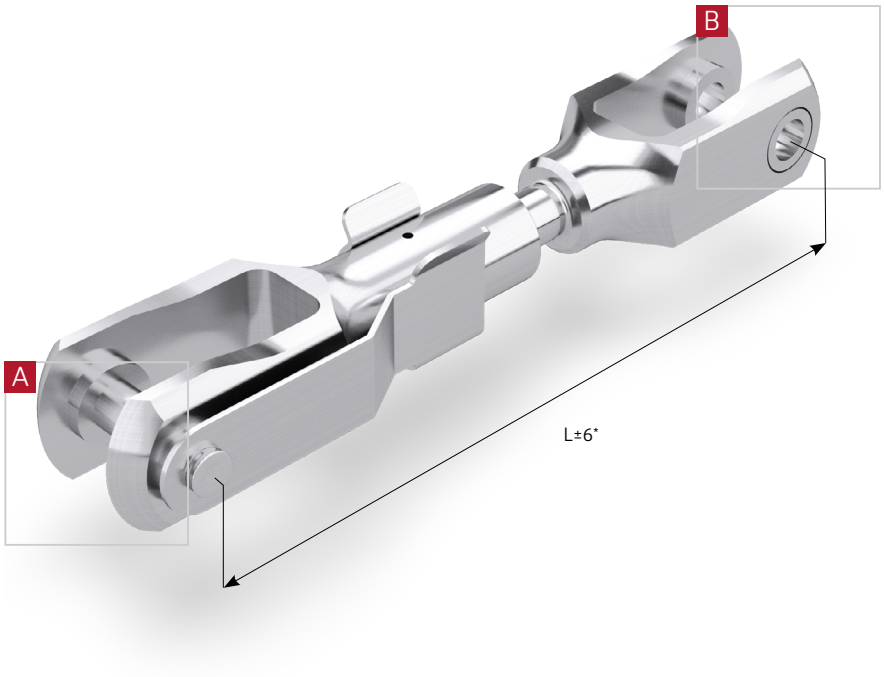

View A

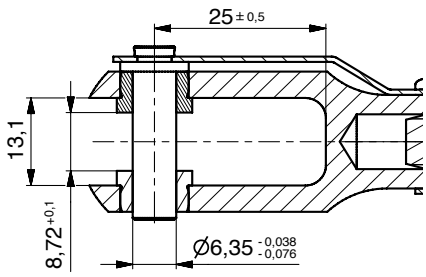

View B

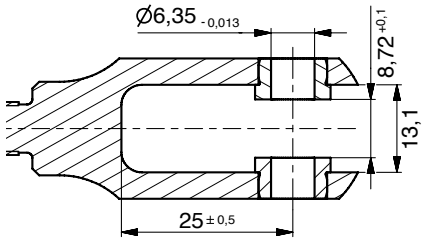

* adjustable range [mm]

ABS-no.	GMT-no.	Ultimate tension load [kN]	Ultimate compression load [kN]	Weight [g]	Rod body outer Ø [mm]	Length L [mm]	Material Fork End A	Material Fork End B
ABS1187 R 1080 GSY	65034204	20	7,5	106	14	108	AL	CRES
ABS1187 R 1739 GSY	65034203	20	7,5	125	14	173,9	AL	CRES
ABS1187 R 1961 GSY	65034201	20	7,5	131	14	196,1	AL	CRES
ABS1187 R 2171 GSY	65034202	20	7,5	137	14	217,1	AL	CRES
ABS1187 R 2560 GSY	65034205	20	7,5	153	14	256	AL	CRES
ABS1187 R 3600 GSY	65034206	20	7,5	195	14	360	AL	CRES

TIE RODS ACC. TO ABS1187 GMT-NO. 650371.., 650054..

Traceparts

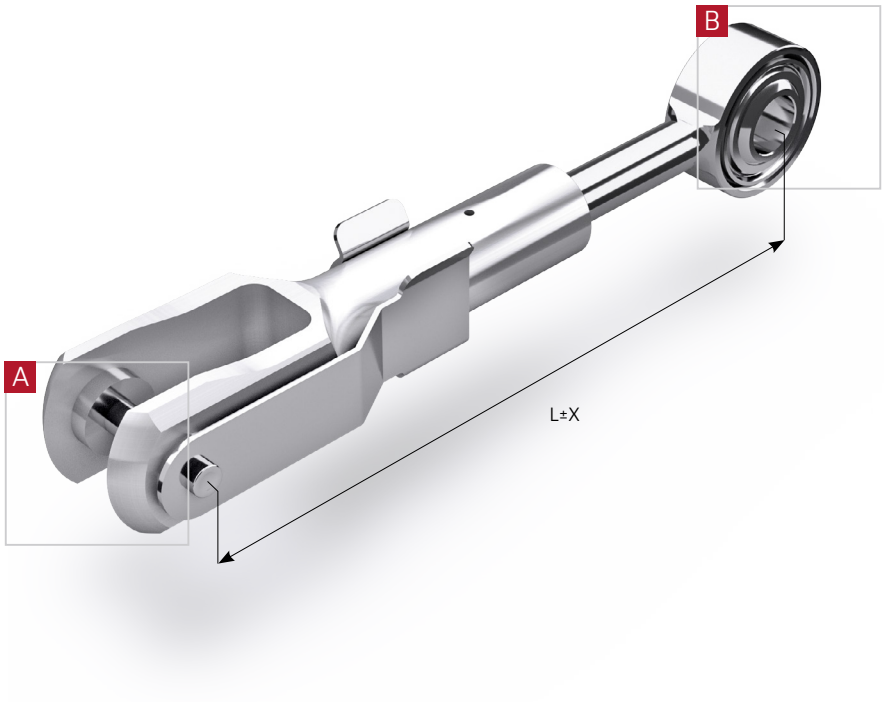

View A

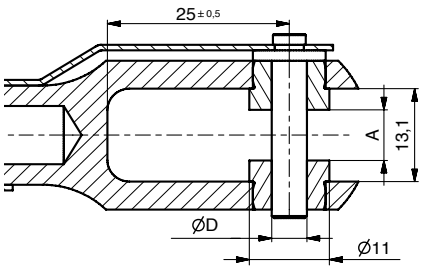

View B

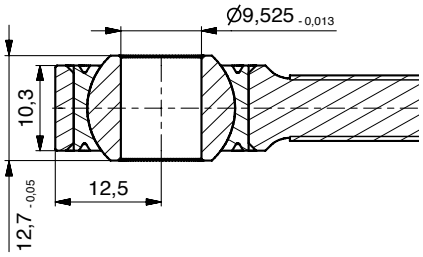

ABS-no.	GMT-no.	Adjustable range X [mm]	ØD [mm] -0,038 -0,076	A [mm] +0,1 0	Ultimate tension load [kN]	Ultimate compres-sion load [kN]	Weight [g]	Rod body outer Ø [mm]	Length L [mm]	Material Fork End A	Material Rod End B
ABS1187 C 1156 GSY	65005406	12,7	6,35	8,72	20	7,5	105	14	115,6	AL	CRES
ABS1187 C 1156 GVY	65005408	12,7	6,35	8,72	20	16	106	14	115,6	AL	CRES
ABS1187 C 1156 GKX	65037102	12,7	4,83	7,15	14	14	100	14	115,6	AL	CRES
ABS1187 C 1504 GSY	65005404	25,4	6,35	8,72	20	7,5	120	14	150,4	AL	CRES
ABS1187 C 1504 GVY	65005407	25,4	6,35	8,72	20	16	120	14	150,4	AL	CRES
ABS1187 C 1504 GKX	65037103	25,4	4,83	7,15	14	14	120	14	150,4	AL	CRES
ABS1187 C 1852 GSY	65005405	25,4	6,35	8,72	20	7,5	129	14	185,2	AL	CRES
ABS1187 C 1852GKX	65037101	25,4	4,83	7,15	14	14	129	14	185,2	AL	CRES
ABS1187 C 2200 GSY	65005401	25,4	6,35	8,72	20	7,5	138	14	220	AL	CRES
ABS1187 C 2500 GKX	65037104	25,4	4,83	7,15	14	14	147	14	250	AL	CRES
ABS1187 C 2548 GSY	65005409	25,4	6,35	8,72	20	7,5	154	14	254,8	AL	CRES
ABS1187 C 2896 GSY	65005402	25,4	6,35	8,72	20	7,5	166	14	289,6	AL	CRES
ABS1187 C 2896 GSY	65005410	25,4	6,35	8,72	20	7,5	166	14	289,6	AL	CRES
ABS1187 C 3592 GSY	65005403	25,4	6,35	8,72	20	7,5	194	14	359,2	AL	CRES

TIE RODS ACC. TO ABS1187 GMT-NO. 650374.., 650019..

Traceparts

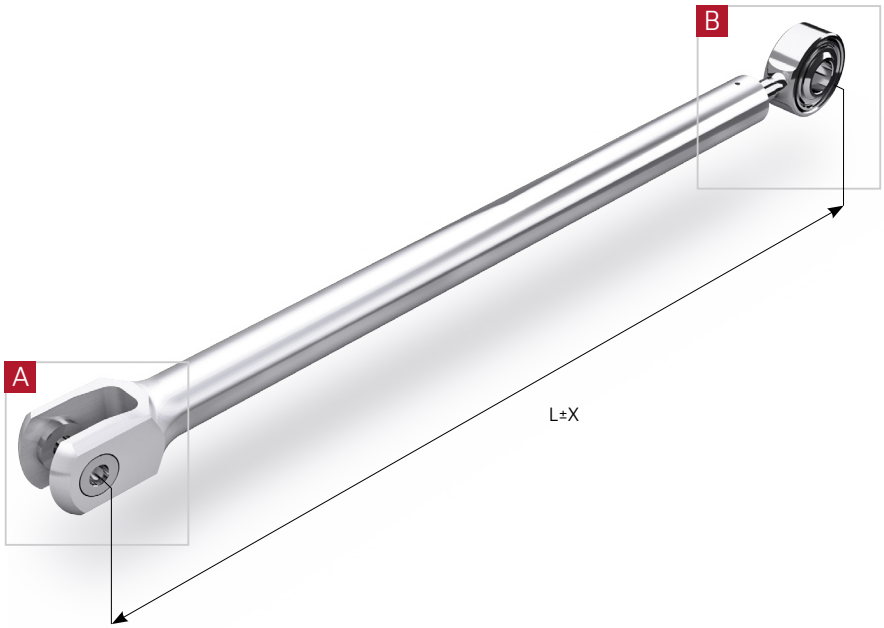

View A

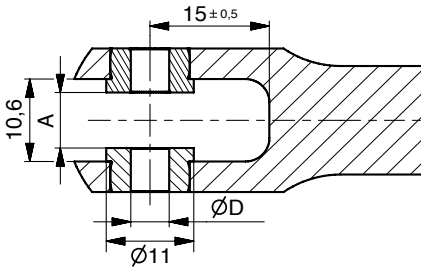

View B

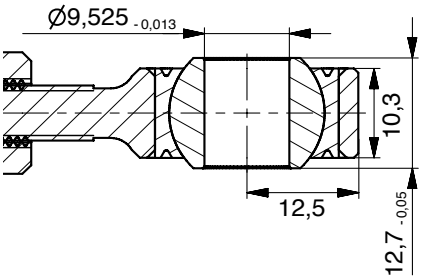

ABS-no.	GMT-no.	Adjustable range X [mm]	ØD [mm] -0,038 -0,076	A [mm] +0,1 0	Ultimate tension load [kN]	Ultimate compression load [kN]	Weight [g]	Rod body outer Ø [mm]	Length L [mm]	Material Fork End A	Material Rod End B
ABS1187 A 5120 GPX	65001906	+7,0 -3,5	4,83	7,15	14	17	59	14	51,2	AL	CRES
ABS1187 A 5120 GPY	65001902	+7,0 -3,5	6,35	8,72	14	17	58	14	51,2	AL	CRES
ABS1187 A 5120 GKX	65037402	+7,0 -3,5	4,83	7,15	14	14	59	14	51,2	AL	CRES
ABS1187 A 6120 GPX	65001907	±7,0	4,83	7,15	14	17	61	14	61,2	AL	CRES
ABS1187 A 6120 GPY	65001901	±7,0	6,35	8,72	14	17	60	14	61,2	AL	CRES
ABS1187 A 0900 GKX	65037401	±7,0	4,83	7,15	14	14	72	14	90	AL	CRES
ABS1187 A 2500 GKX	65037403	±7,0	4,83	7,15	14	14	132	14	250	AL	CRES

TIE RODS ACC. TO ABS1187 GMT-NO. 650375..

Traceparts

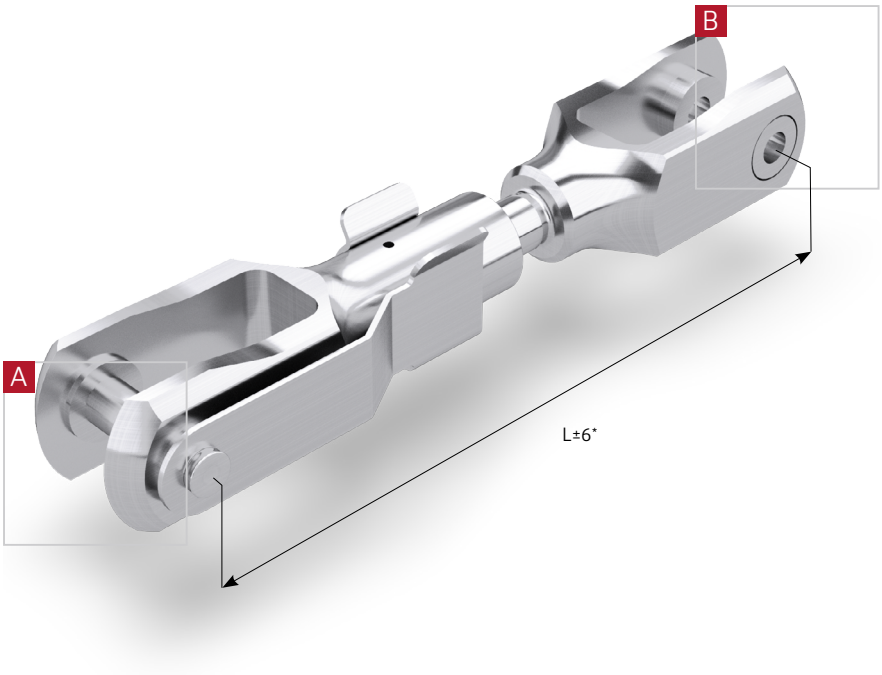

View A

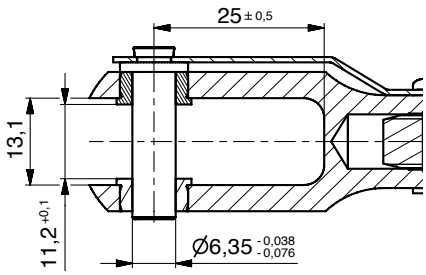

View B

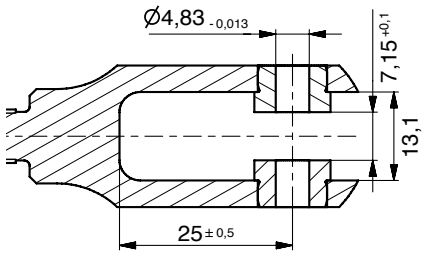

* adjustable range [mm]

ABS-no.	GMT-no.	Ultimate tension load [kN]	Ultimate compression load [kN]	Weight [g]	Rod body outer Ø [mm]	Length L [mm]	Material Fork End A	Material Fork End B
ABS1187 H 1050 GKX	65037502	14	14	105	14	105	AL	CRES
ABS1187 H 1400 GKX	65037501	14	14	118	14	140	AL	CRES
ABS1187 H 2650 GKX	65037503	14	14	156	14	265	AL	CRES

TIE RODS ACC. TO ABS1187 GMT-NO. 65049701

Traceparts

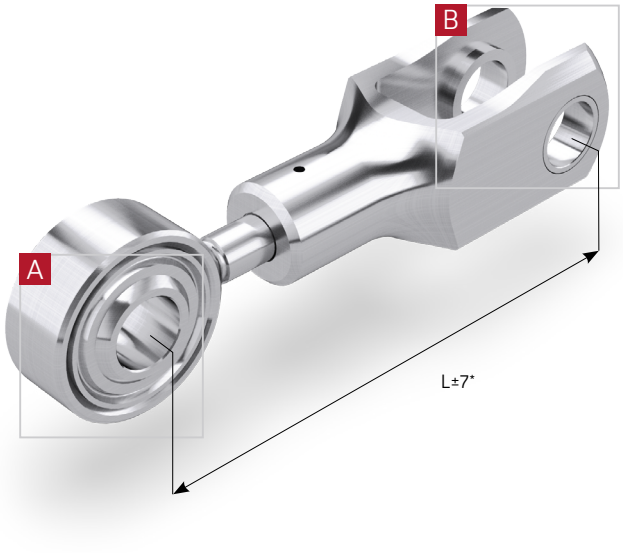

View A

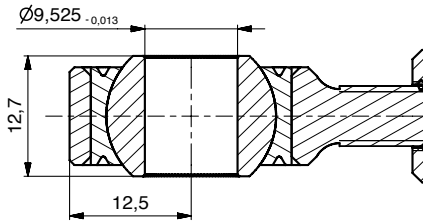

View B

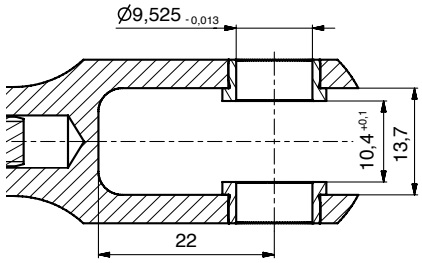

* adjustable range [mm]

ABS-no.	GMT-no.	Ultimate tension load [kN]	Ultimate compression load [kN]	Weight [g]	Rod body outer Ø [mm]	Length L [mm]	Material Fork End B	Material Rod End A
ABS1187 U 0700 GPY	65049701	14	17	64	14	70	AL	CRES

TIE RODS ACC. TO ABS1187 GMT-NO. 650498..

Traceparts

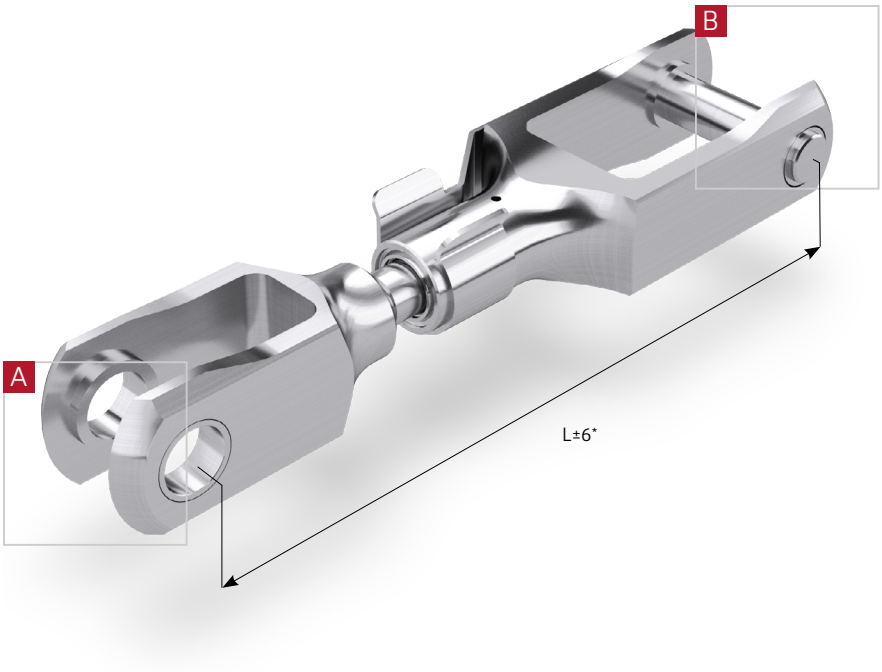

View A

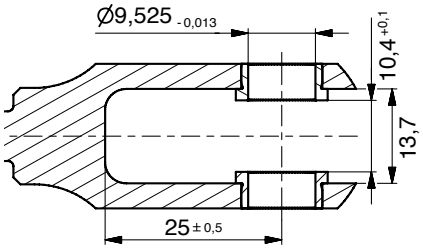

View B

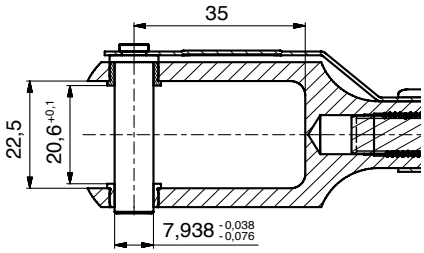

* adjustable range [mm]

ABS-no.	GMT-no.	Ultimate tension load [kN]	Ultimate compression load [kN]	Weight [g]	Rod body outer Ø [mm]	Length L [mm]	Material Fork End B	Material Fork End A
ABS1187 S 1130 GSY	65049801	20	7,5	121	14	113	AL	CRES
ABS1187 S 1330 GSY	65049802	20	7,5	126	14	133	AL	CRES

EN TIE RODS

TABLE OF CONTENTS

→ EN4693 136 - 143
→ EN4694 144 - 150
→ EN4695 151 - 157

DESCRIPTION TO TIE RODS EN4693

The Tie Rods EN4693 are patented with following patents.

Patented design

Figure 1 Assembly code A

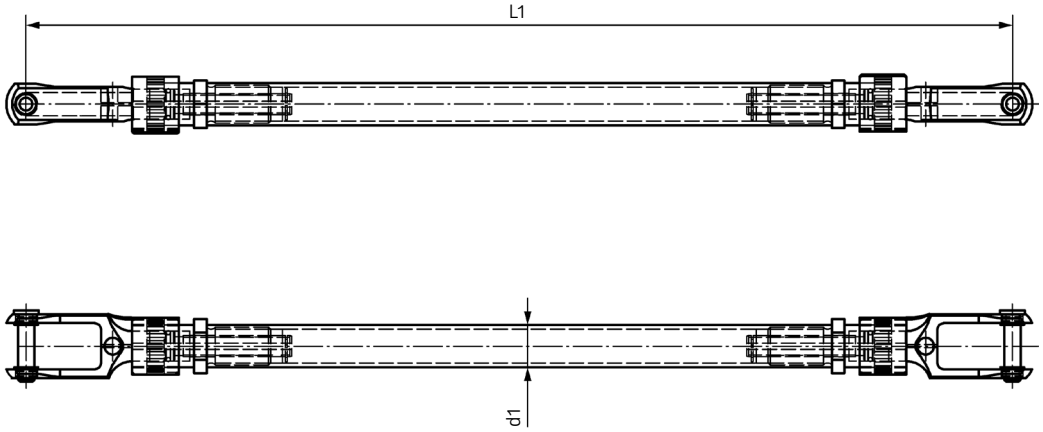

Figure 2 Assembly code B

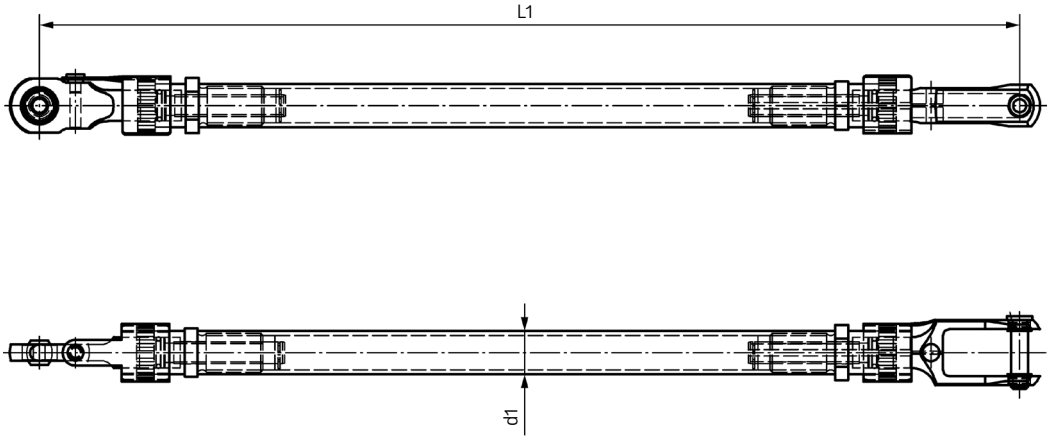

Figure 3 Assembly code C

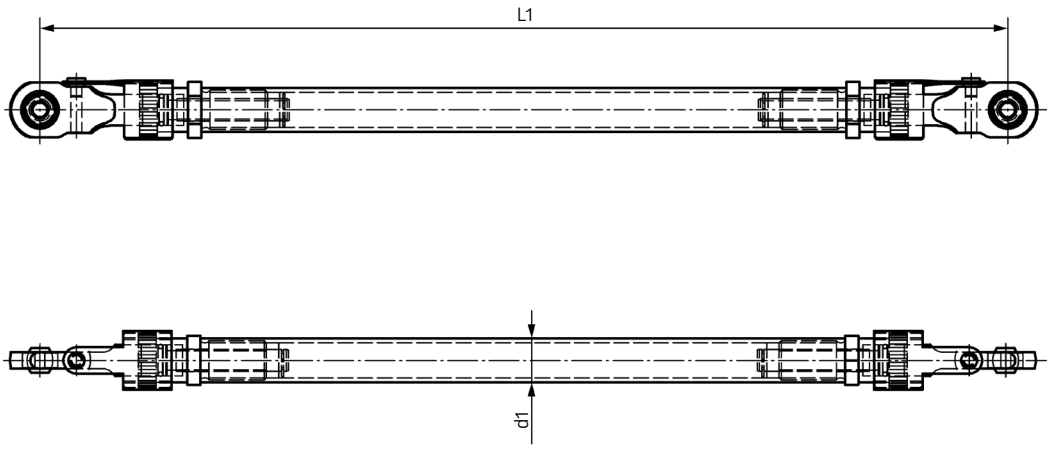

DESCRIPTION TO TIE RODS EN4693

Dimensions:

- Diameter d1= ∅20mm
- Possible Length L1=250-900mm in 5mm Steps, Adjustable range ±12,7mm,
- Example Length code: Length code 250mm = 0250

Material:

- Material Code A = Fork, eye ends out of Aluminum (WL 3.1354), Rod body out of Aluminum (WL 3.1354)
- Material Code B = Fork, eye ends out of Stainless steel (WL 1.4548.4), Rod body out of Aluminum (WL 3.1354)
- Material Code A and B: Bushing in fork ends out of Titanium alloy 3.7165 according to EN 3311

Surface Finish:

- Rod body: Anodized according to LN 9368-4-2000, coating according to LN 9368-7-5023 and according to LN 9368-7-5106
- Fork, eye ends Material Code A : Anodized according to LN 9368-4-2001
- Fork, eye ends Material Code B : Passivated according to ISO 8075

Tension loads:

- Material Code A and B
- Ultimate load= 20kN
- Limit load = 13,3kN

Compression loads:

Compression Loads Material Code A

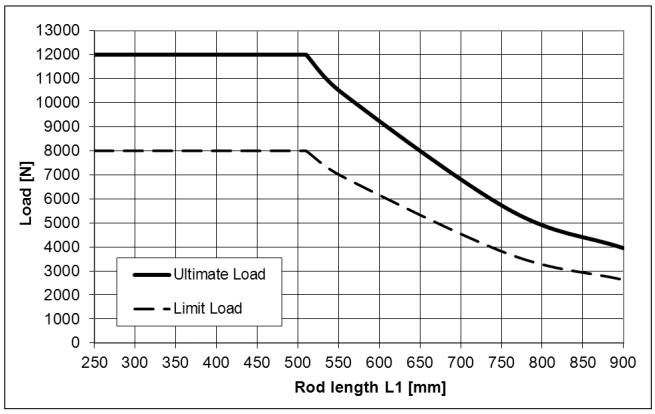

Compression Loads Material Code B

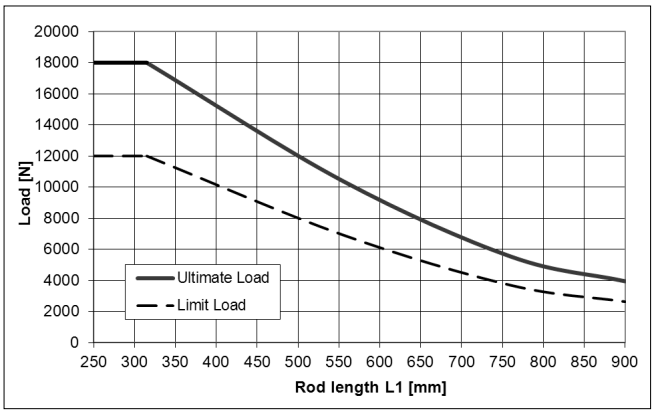

Fatigue loads:

Fatigue loads see EN4691

Size codes Fork ends:

Fork end with Clip code A

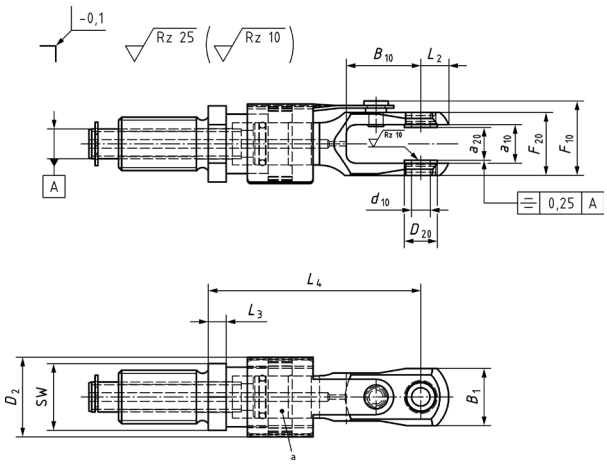

Fork end with Clip code A (only for size code 10)

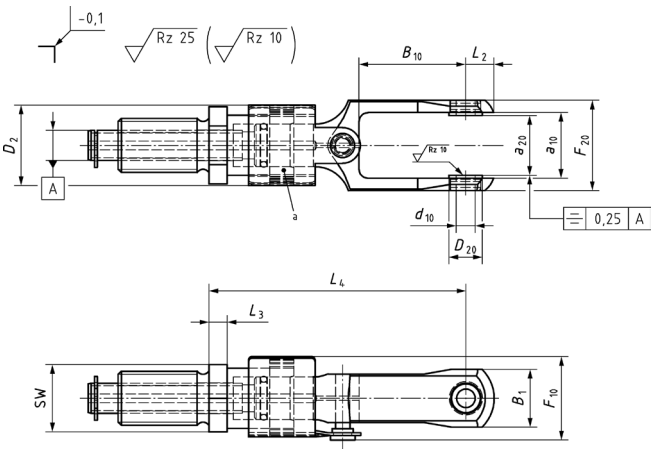

DESCRIPTION TO TIE RODS EN4693

Fork end with Clip code B

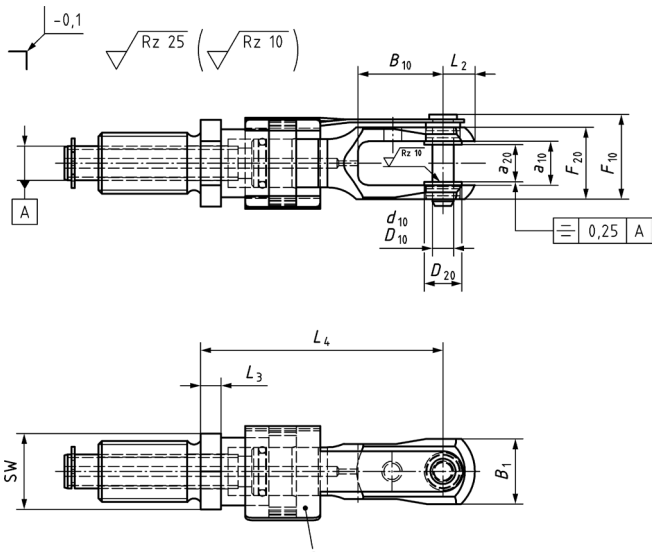

Fork end with Clip code B (R)ight

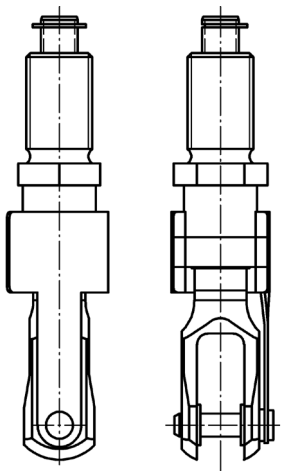

Fork end with Clip code B (L)eft

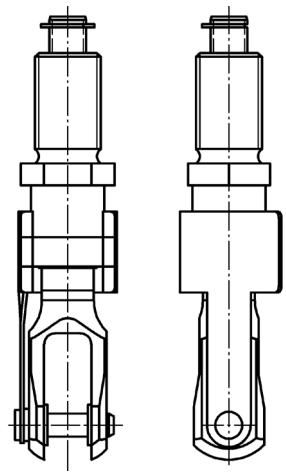

Table 3 Size codes and dimensions fork ends material code A and B, clip code A

all dimensions in mm

Size code	Clip code	a_{10}	a_{20} +0,1 0	B_1	B_{10} ±0,5	Ø D_2	Ø d_{10} 0 -0,013	Ø D_{20}	F_{10}	F_{20}	L_1	L_2	L_3	L_4	SW Hexagon spanner flat	Thread	Mass [g] ± 3 % Material code A	Mass [g] ± 3 % Material code B
01	A	13,1	8,72	19	25	26,8	6,350	11	24,8	21	250-900	9,5	6	71,0	22,2	RH	73	138
																LH		
02		11,0	9,10													RH	75	146
																LH		
03		13,1	11,1													RH	72	137
																LH		
04			11,2													RH	72	137
																LH		
05							7,938									RH	71	136
																LH		
06					30									76,0		RH	74	147
																LH		
07							6,350									RH	75	148
																LH		
08		13,7	12,7	21			9,525	13				10,3				RH	74	145
																LH		
09		16,1	14,2	19	25		6,350	11	27,8	24		9,5		71,0		RH	72	137
																LH		
10		22,5	20,6		35		7,938		28,3	30,4	270-900			84,4		RH	79	163
																LH		

Table 4 Size codes and dimensions fork ends material code A and B, clip code B

all dimensions in mm

Size code a*	Size code b**	Clip code	a_{10}	a_{20} +0,1 0	B_1	B_{10} ±0,5	⌀ D_2	⌀ d_{10} 0 -0,013	⌀ D_{10} -0,038 -0,076	⌀ D_{20}	F_{10}	F_{20}	L_1	L_2	L_3	L_4	SW Hexagon spanner flat	Thread	Mass [g] ± 3 % Material code A	Mass [g] ± 3 % Material code B
21	(31)	B	13,1	8,72	19	25	26,8	6,350	6,350	11	24,8	21	250-900	9,5	8	71,0	22,2	RH	80	145
																		LH		
22	(32)		11,0	9,10														RH	82	153
																		LH		
23	(33)		13,1	11,1														RH	79	144
																		LH		
24	(34)			11,2														RH	79	144
																		LH		
25	(35)							7,938	7,938									RH	81	146
																		LH		
26	(36)					30										76,0		RH	86	158
																		LH		
27	(37)							6,350	6,350									RH	83	156
																		LH		
28	(38)		13,7	12,7	21			9,525	9,525	13				10,3				RH	89	160
																		LH		
29	(39)		16,1	14,2	19	25		6,350	6,350	11	27,8	24		9,5		71,0		RH	79	144
																		LH		
30	(40)		22,5	20,6		35		7,938	7,938		28,3	30,4	270-900			84,4		RH	93	177
																		LH		

*a: Size code for fork end with locking clip R **b: Size code for fork end with locking clip L

Size codes eye ends:

Eye end with Clip code A

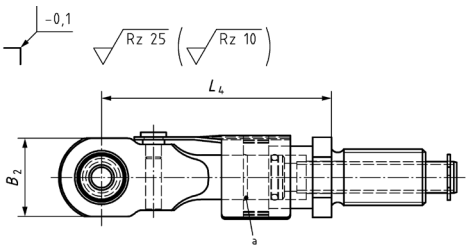

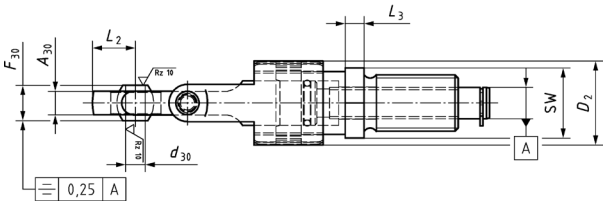

Table 5 Size codes and dimensions eye ends material code A and B, clip code A

all dimensions in mm

Size code	A_{30}	B_2	Ø D_2	Ø d_{30} 0 -0,013	F_{30} 0 -0,05	L_1	L_2	L_3	L_4	SW Hexagon spanner flat	Thread	Mass [g] ± 3 % Material code A	Mass [g] ± 3 % Material code B
41	8,31	25	26,8	6,350	11,1	250-900	13,6	8	72,4	22,22	RH	85	157
											LH		
42				7,938							RH	86	156
											LH		
43		30					16,1				RH	93	177
											LH		
44	10,31			9,525	12,7						RH	101	181
											LH		

Mass calculation:

For mass calculation, see Equation (1) and Equation (2).

(1) $h = L_1 - L_{4r} - L_{4l}$
(2) $m_t = 0{,}3054\ \text{g/mm} \times h + m_r + m_l$

h is the length of rod body (mm);
L_1 is the length of tie rod (mm), see Figure 1, Figure 2 and Figure 3;
L_{4r} is the length of fork / eye end – right side (mm), see Table 3, Table 4 and Table 5;
L_{4l} is the length of fork / eye end – left side (mm), see Table 3, Table 4 and Table 5;
m_r is the mass of fork / eye end – right side (g), see Table 3, Table 4 and Table 5;
m_l is the mass of fork / eye end – left side (g), see Table 3, Table 4 and Table 5;
m_t is total mass (g).

Designation

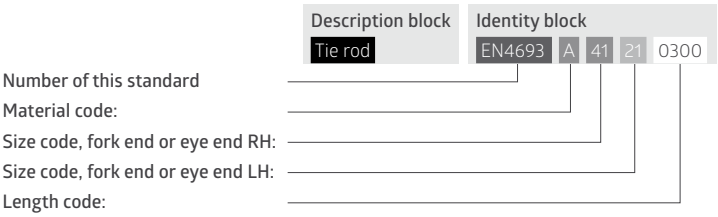

Technical Specification see EN4691

Components and their function

Rod end

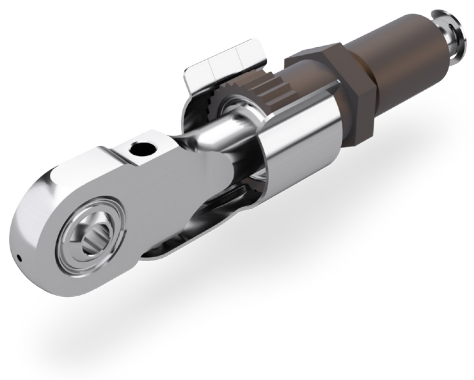

Fork end

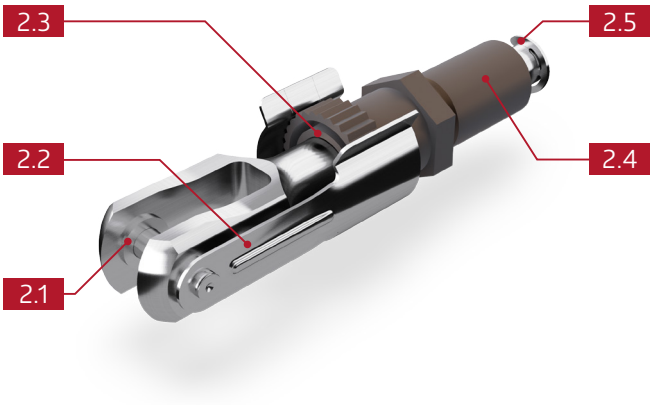

2.1

Bushes

- Aids better load transmission.
- Higher surface pressure possible.
- Through change of geometry
- (boring/width) modular structure with same geometry of fork possible.

2.2

Locking clip

Quick-locking mechanism for assembly by hand. Serves as anti-twist plate and aids in transmission of loads.

2.3

Rubber ring

Prevents penetration of water and dust into rod assembly.

2.4

Plastic insert

Aids in transmission of loads. Plastic prevents corrosion in thread and acts as an insulator.

2.5

Safety ring

Prevents and controls too far turning off the thread.

TIE ROD ACC. TO EN4693 GMT-NO. EN4693A22220310

Traceparts

DESCRIPTION TO TIE RODS EN4694

Patented design

Figure 1 Assembly code D

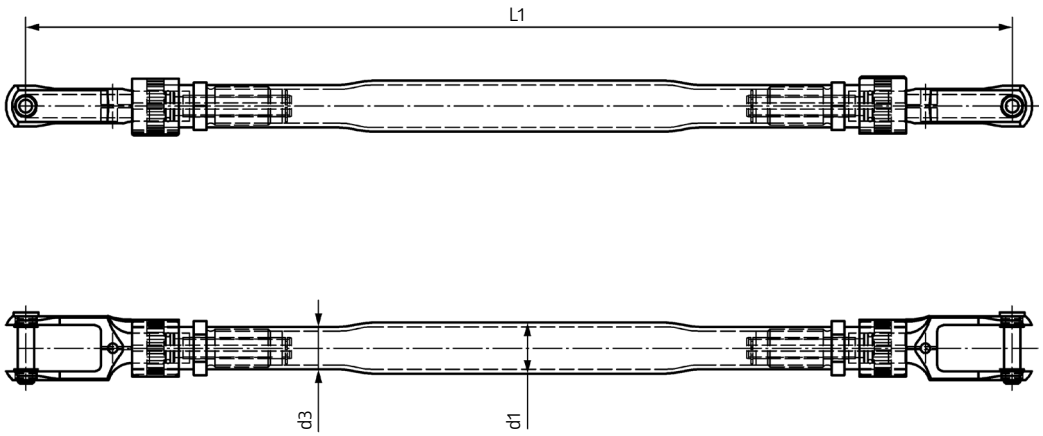

Figure 2 Assembly code E

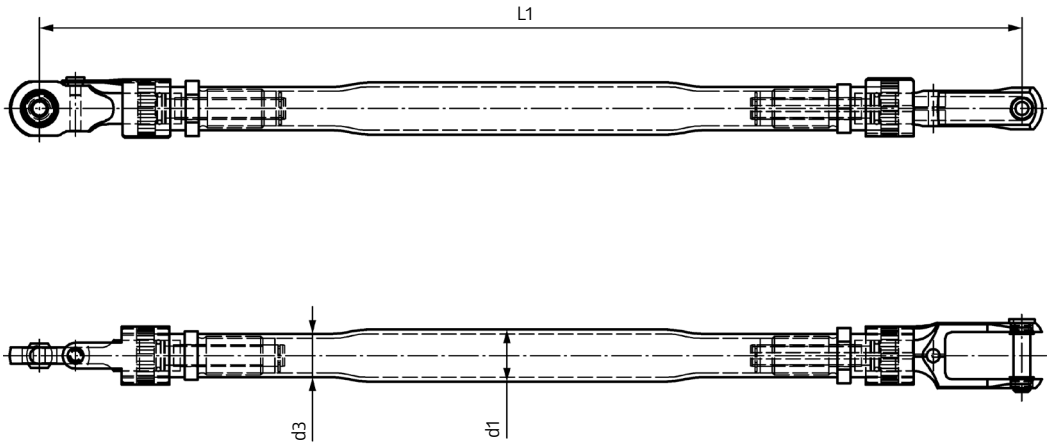

Figure 3 Assembly code F

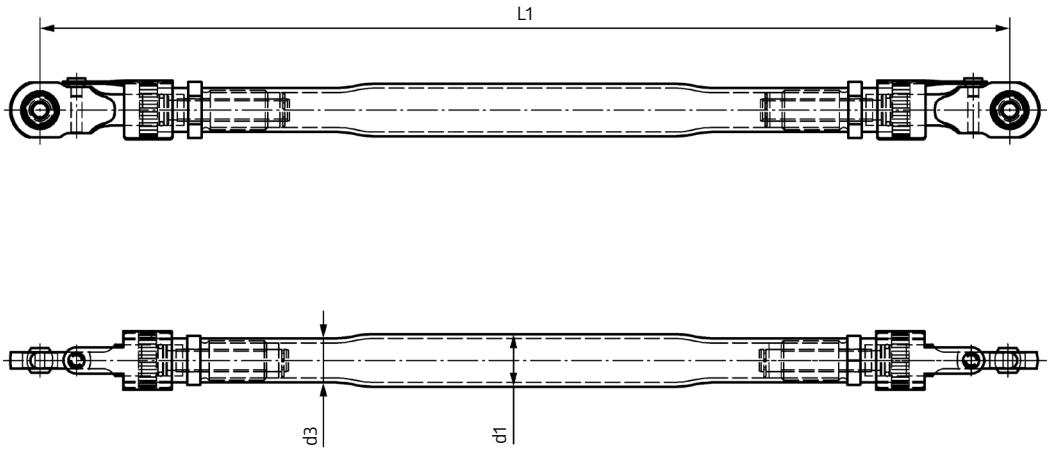

DESCRIPTION TO TIE RODS EN4694

Dimensions:

- For length 250 mm to 330 mm Diameter d1= ∅22,2 mm, d3=22,2 mm (no swaging).
- For length 330 mm to 900 mm Diameter d1= ∅25,4 mm, d3=22,2 mm
- Possible Length L1=250-900 mm in 5mm steps, Adjustable range ±12,7 mm,
- Example Length code: Length code 250mm = 0250

Material:

- Material Code A: Fork, eye ends out of Aluminum (WL 3.1354), Rod body out of Aluminum (WL 3.1354)
- Material Code B: Fork, eye ends out of Stainless steel (WL 1.4548.4), Rod body out of Aluminum (WL 3.1354)
- Material Code A and B: Bushing in fork ends out of Titanium alloy 3.7165 according to EN 3311

Surface Finish:

- Rod body: Anodized according to LN 9368-4-2000, coating according to LN 9368-7-5023 and according to LN 9368-7-5106
- Fork, eye ends Material Code A: Anodized according to LN 9368-4-2001
- Fork, eye ends Material Code B: Passivated according to ISO 8075

Tension loads:

	Material Code A [kN]	Material Code B (Pin diameter ∅6,35) [kN]	Material Code B (Pin diameter ∅7,938 and 9,525) [kN]
Ultimate load	20,0kN	36,0kN	40,0kN
Limit load	13,3kN	24,0kN	26,7kN

Compression loads:

Compression Loads Material Code A

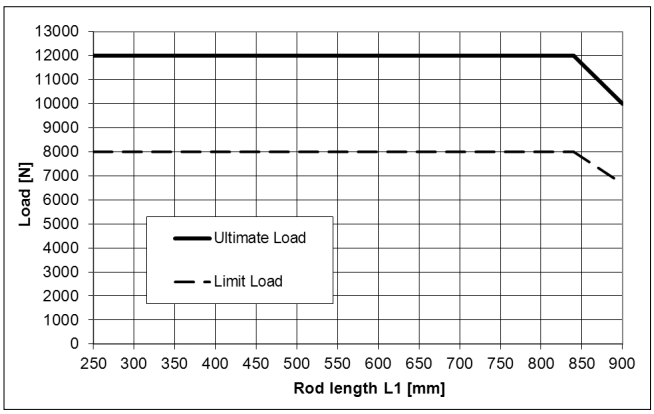

Compression Loads Material Code B

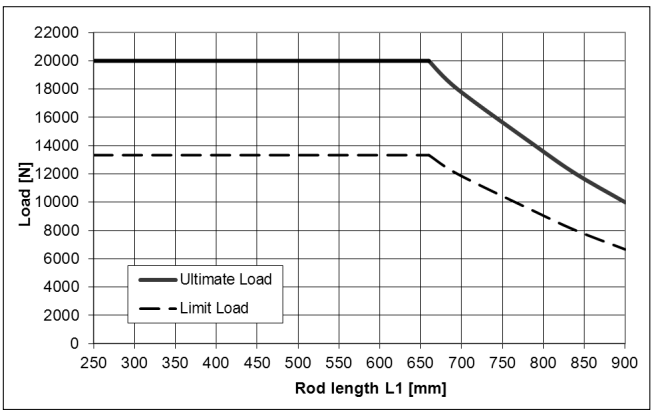

Fatigue loads:

Fatigue loads see EN4691

Size codes Fork ends:

Fork end with Clip code A

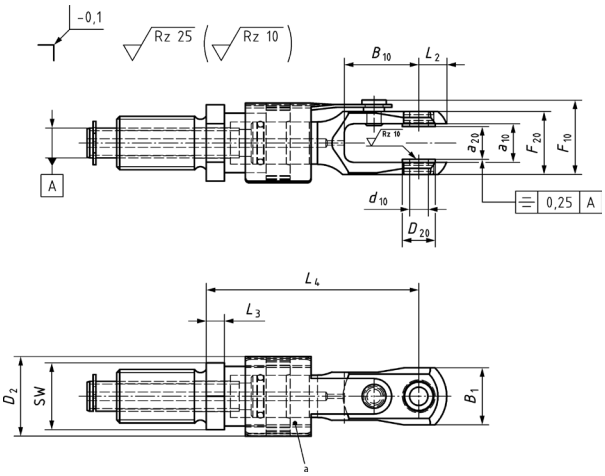

Fork end with Clip code B

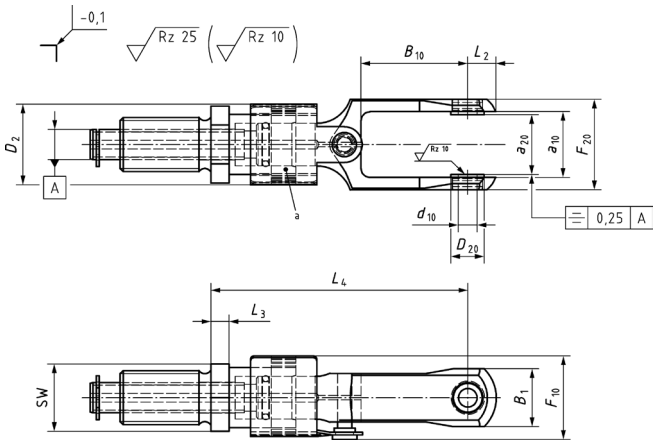

Fork end with Clip code B

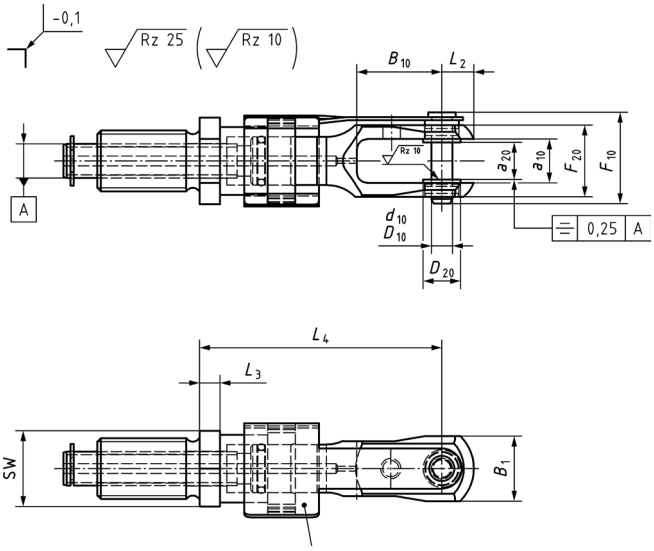

Fork end with Clip code B (R)ight

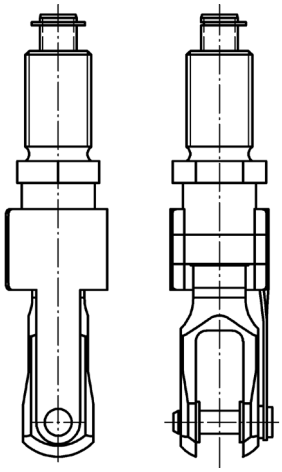

Fork end with Clip code B (L)eft

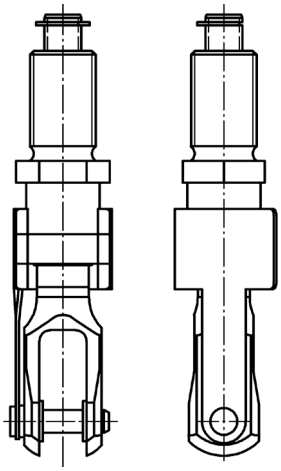

Table 3 Size codes and dimensions fork ends material code A and B, clip code A

all dimensions in mm

Size code	Clip code	a_{10}	a_{20} +0,1 0	B_1	B_{10} ±0,5	∅ D_2	∅ d_{10} 0 -0,013	∅ D_{20}	F_{10}	F_{20}	L_1	L_2	L_3	L_4	SW Hexagon spanner flat	Thread	Mass [g] ± 3 % Material code A	Mass [g] ± 3 % Material code B
01	A	13,1	8,72	19	25	26,8	6,350	11	24,8	21	250-900	9,5	6	71,0	22,2	RH	73	138
																LH		
02		11,0	9,10													RH	75	146
																LH		
03		13,1	11,1													RH	72	137
																LH		
04			11,2													RH	72	137
																LH		
05							7,938									RH	71	136
																LH		
06					30									76,0		RH	75	147
																LH		
07							6,350									RH	75	148
																LH		
08		13,7	12,7	21			9,525	13				10,3				RH	74	145
																LH		
09		16,1	14,2	19	25		6,350	11	27,8	24		9,5		71,0		RH	72	137
																LH		
10		22,5	20,6		35		7,938		28,3	30,4	270-900			84,4		RH	79	163
																LH		

Table 4 Size codes and dimensions fork ends material code A and B, clip code B

all dimensions in mm

Size code a*	Size code b**	Clip code	a_{10}	a_{20} +0,1 0	B_1	B_{10} ±0,5	∅ D_2	∅ d_{10} 0 -0,013	∅ D_{10} -0,038 -0,076	∅ D_{20}	F_{10}	F_{20}	L_1	L_2	L_3	L_4	SW Hexagon spanner flat	Thread	Mass [g] ± 3 % Material code A	Mass [g] ± 3 % Material code B
21	(31)	B	13,1	8,72	19	25	26,8	6,350	6,350	11	24,8	21	250-900	9,5	8	71,0	22,2	RH	80	145
																		LH		
22	(32)		11,0	9,10														RH	82	153
																		LH		
23	(33)		13,1	11,1														RH	79	144
																		LH		
24	(34)			11,2														RH	79	144
																		LH		
25	(35)							7,938	7,938									RH	81	146
																		LH		
26	(36)					30										76,0		RH	86	158
																		LH		
27	(37)							6,350	6,350									RH	83	156
																		LH		
28	(38)		13,7	12,7	21			9,525	9,525	13				10,3				RH	89	160
																		LH		
29	(39)		16,1	14,2	19	25		6,350	6,350	11	27,8	24		9,5		71,0		RH	79	144
																		LH		
30	(40)		22,5	20,6		35		7,938	7,938		28,3	30,4	270-900			84,4		RH	93	177
																		LH		

*a: Size code for fork end with locking clip R **b: Size code for fork end with locking clip L

DESCRIPTION TO TIE RODS EN4694

Size codes eye ends:

Eye end with Clip code A

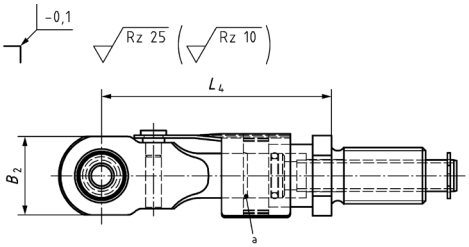

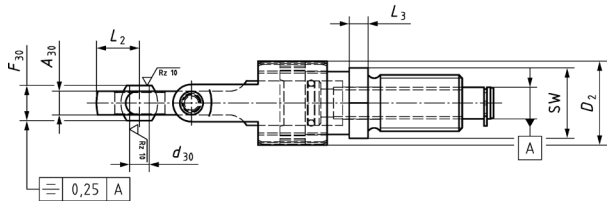

Table 5 Size codes and dimensions eye ends material code A and B, clip code A

all dimensions in mm

Size code	A_{30}	B_2	Ø D_2	Ø d_{30} 0 -0,013	F_{30} 0 -0,05	L_1	L_2	L_3	L_4	SW Hexagon spanner flat	Thread	Mass [g] ± 3 % Material code A	Mass [g] ± 3 % Material code B
41	8,31	25	26,8	6,350	11,1	250-900	13,6	8	72,4	22,22	RH	85	157
											LH		
42				7,938							RH	86	156
											LH		
43		30					16,1				RH	93	177
											LH		
44	10,31			9,525	12,7						RH	101	181
											LH		

Mass calculation:

For mass calculation with L_1 = 250 mm to 330 mm, see Equation (1) and Equation (2).
For mass calculation with L_1 = 330 mm to 900 mm, see Equation (1) and Equation (3).

(1) $h = L_1 - L_{4r} - L_{4l}$
(2) $m_t = 0{,}4886\ \text{g/mm} \times h + m_r + m_l$
(3) $m_t = 0{,}57\ \text{g/mm} \times (h - 140\ \text{mm}) + 68\ \text{g} + m_r + m_l$

h is the length of rod body (mm);
L_1 is the length of tie rod (mm), see Figure 1, Figure 2 and Figure 3;
L_{4r} is the length of fork / eye end – right side (mm), see Table 3, Table 4 and Table 5;
L_{4l} is the length of fork / eye end – left side (mm), see Table 3, Table 4 and Table 5;
m_r is the mass of fork / eye end – right side (g), see Table 3, Table 4 and Table 5;
m_l is the mass of fork / eye end – left side (g), see Table 3, Table 4 and Table 5;
m_t is the total mass (g).

Designation

Description block	Identity block				
Tie rod	EN4694	A	41	21	0300

Number of this standard
Material code:
Size code, fork end or eye end RH:
Size code, fork end or eye end LH:
Length code:

Technical Specification see EN4691

COMPONENTS OF TIE RODS EN4694

Components and their function

Rod end

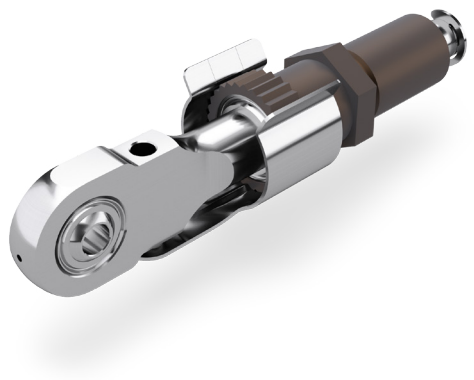

Fork end

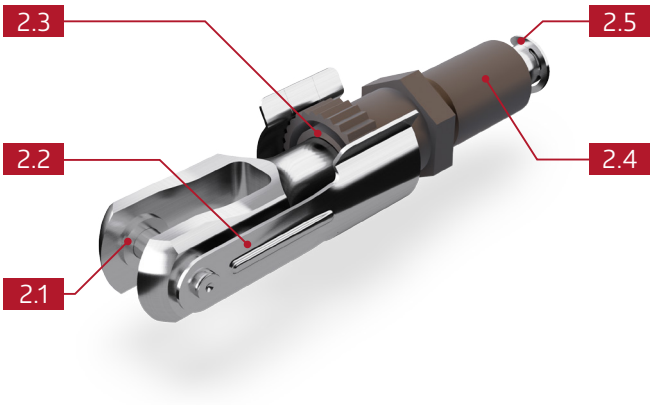

2.1

Bushes

- Aids better load transmission.
- Higher surface pressure possible.
- Through change of geometry
- (boring/width) modular structure with same geometry of fork possible.

2.2

Locking clip

Quick-locking mechanism for assembly by hand. Serves as anti-twist plate and aids in transmission of loads.

2.3

Rubber ring

Prevents penetration of water and dust into rod assembly.

2.4

Plastic insert

Aids in transmission of loads. Plastic prevents corrosion in thread and acts as an insulator.

2.5

Safety ring

Prevents and controls too far turning off the thread.

TIE ROD ACC. TO EN4694 GMT-NO. EN4694A28280325

Traceparts

Patented design

Figure 1 Assembly code G

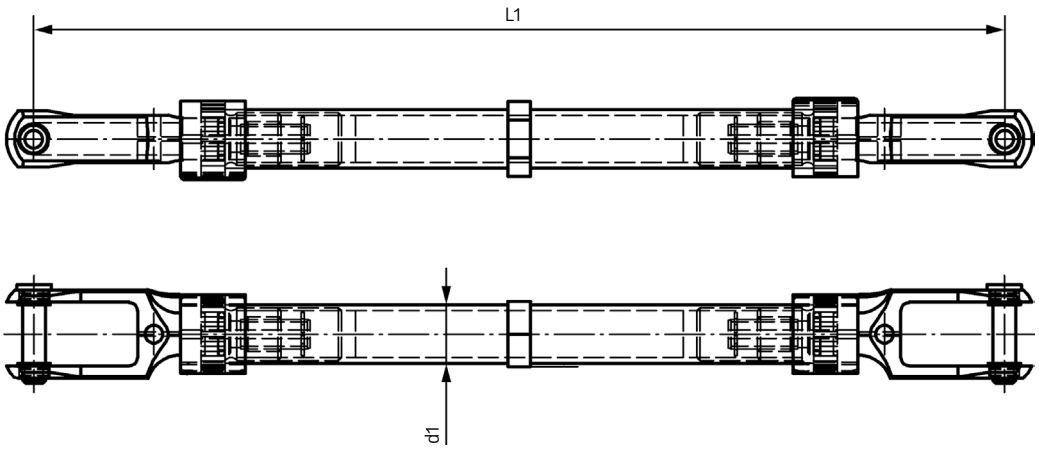

Figure 2 Assembly code H

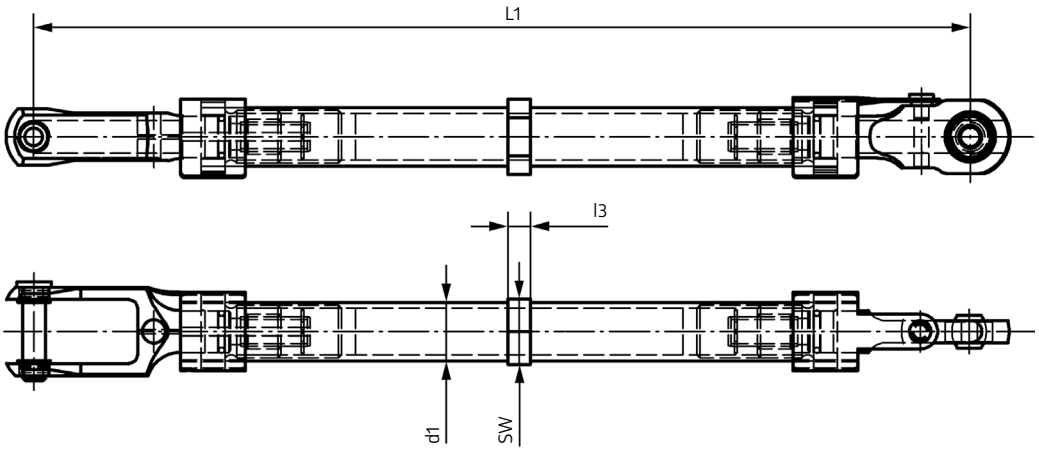

Figure 3 Assembly code K

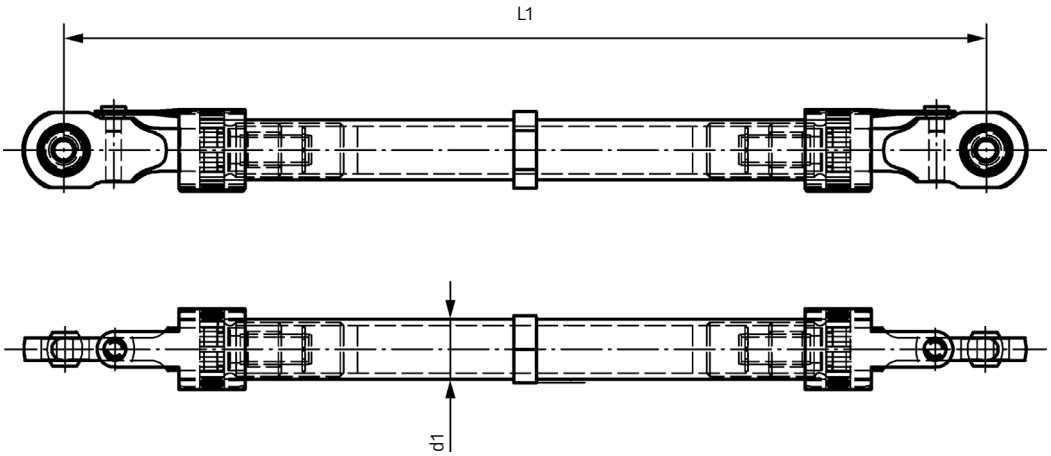

DESCRIPTION TO TIE RODS EN4695

Dimensions:

- Diameter d1= ∅20mm, SW=22,2mm, l3= 8mm
- Possible Length L1=160-250mm in 5mm Steps, Adjustable range ±6,35mm
- Example Length code: Length code 160mm = 0160

Surface Finish:

- Rod body: Anodized according to LN 9368-4-2000, coating according to LN 9368-7-5023 and according to LN 9368-7-5106
- Fork, eye ends Material Code C : Passivated according to ISO 8075

Material:

- Material Code C = Fork, eye ends out of Stainless steel (WL 1.4548.4), Rod body out of Aluminum (WL 3.1354)
- Bushing in fork ends out of Titanium alloy 3.7165 according to EN 3311

Tension loads:

- Material Code C
- Ultimate load= 20kN
- Limit load = 13,3kN

Compression loads:

Compression Loads Material Code C

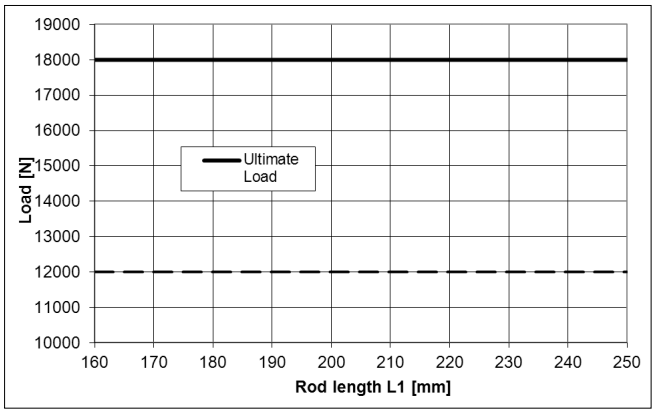

Fatigue loads:

Fatigue loads see EN4691

Size codes Fork ends:

Fork end with Clip code A

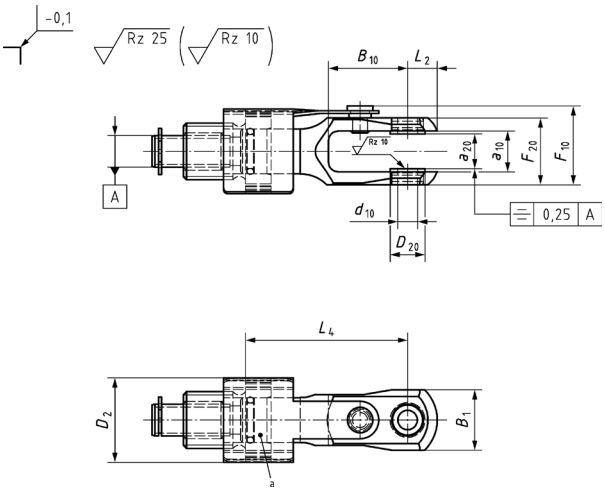

Fork end with Clip code A (only for size code 52)

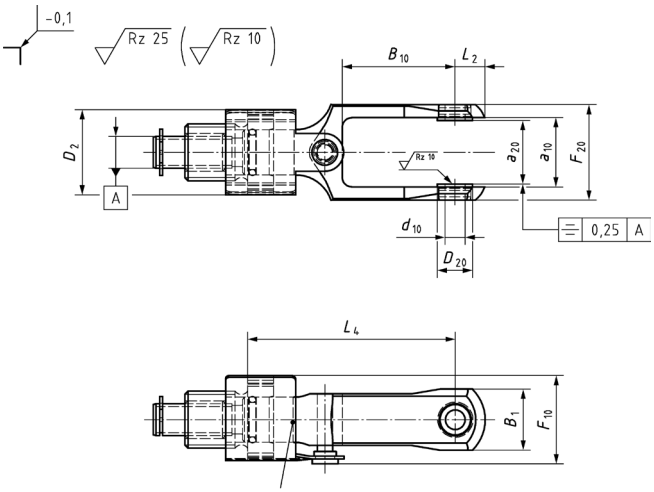

DESCRIPTION TO TIE RODS EN4695

Fork end with Clip code B

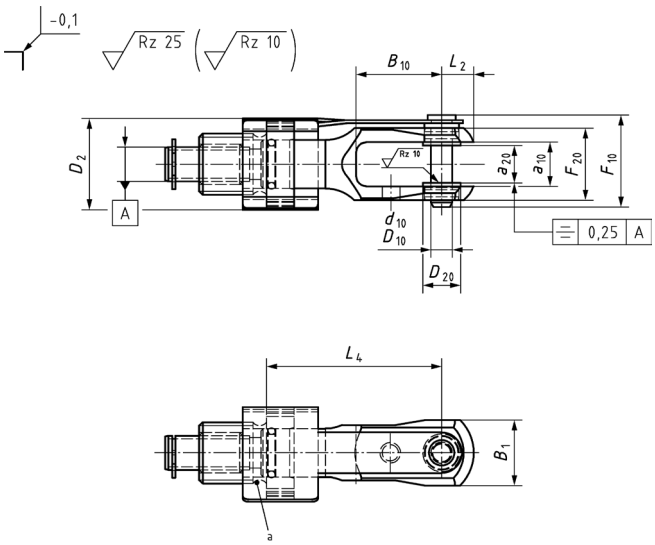

Fork end with Clip code B (R)ight

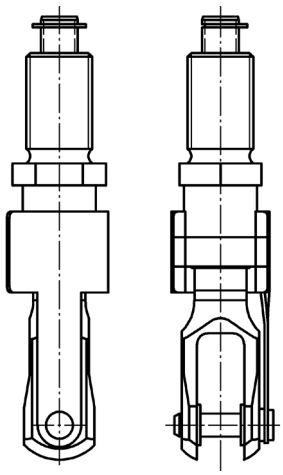

Fork end with Clip code B (L)eft

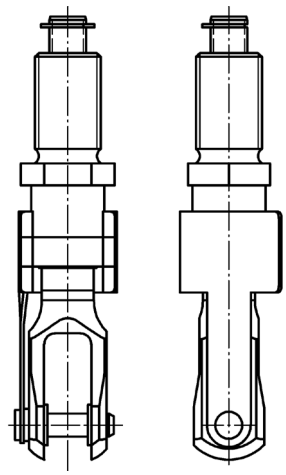

Table 2 Size codes and dimensions fork ends material code C, clip code A

all dimensions in mm

Size code	Clip code	a_{10}	a_{20} +0,1 0	B_1	B_{10} ±0,5	Ø D_2	Ø d_{10} 0 -0,013	Ø D_{20}	F_{10}	F_{20}	L_1	L_2	L_3	L_4	Thread	Mass [g] ± 3 %
50	A	13,1	8,72	19	25	26,8	6,350	11	24,8	21,0	160-250	9,5	8	51	RH	73
															LH	
51			11,20												RH	75
															LH	
52		22,5	20,60		35		7,938		28,3	30,4	180-250			64,4	RH	72
															LH	

Table 3 Size codes and dimensions fork ends material code C, clip code B

all dimensions in mm

Size code a*	Size code b**	Clip code	a_{10}	a_{20} +0,1 0	B_1	B_{10} ±0,5	Ø D_2	Ø d_{10} 0 -0,013	Ø D_{10} -0,038 -0,076	Ø D_{20}	F_{10}	F_{20}	L_1	L_2	L_3	L_4	Thread	Mass [g] ± 3 %
60	(70)	B	13,1	8,72	19	25	26,8	6,350	6,350	11	24,8	21,0	160-250	9,5	8	51	RH	125
																	LH	
61	(71)			11,20													RH	125
																	LH	
62	(72)		22,5	20,60		35		7,938	7,938		28,3	30,4	180-250			64,4	RH	156
																	LH	

*a: Size code for fork end with locking clip R **b: Size code for fork end with locking clip L

Size codes eye ends:

Eye end with Clip code A

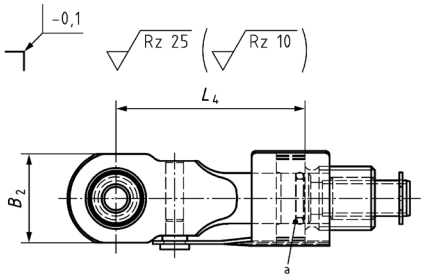

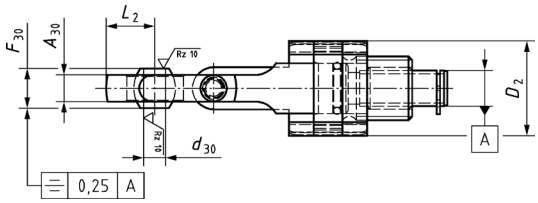

Table 1 Size codes and dimensions eye ends material code C, clip code A

all dimensions in mm

Size code	A_{30}	B_2	Ø D_2	Ø d_{30} 0 -0,013	F_{30} 0 -0,05	L_1	L_2	L_4	Thread	Mass [g] ± 3 %
80	8,31	25	26,8	6,350	11,1	160-250	13,6	53,9	RH LH	132

Mass calculation:

For mass calculation, see Equation (1) and Equation (2).

(1) $h = L_1 - L_{4r} - L_{4l}$
(2) $m_t = 0{,}3054\ g / mm \times (h - 8\ mm) + 5\ g + m_r + m_l$

h is the length of rod body (mm);
L_1 is the length of tie rod (mm), see Figure 1, Figure 2 and Figure 3;
L_{4r} is the length of fork / eye end – right side (mm), see Table 2, Table 3 and Table 4;
L_{4l} is the length of fork / eye end – left side (mm), see Table 2, Table 3 and Table 4;
m_r is the mass of fork / eye end – right side (g), see Table 2, Table 3 and Table 4;
m_l is the mass of fork / eye end – left side (g), see Table 2, Table 3 and Table 4;
m_t is the total mass (g).

Designation

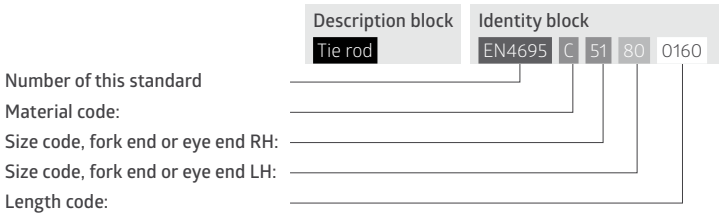

Technical Specification see EN4691

COMPONENTS OF TIE RODS EN4695

Components and their function

Rod end

Fork end

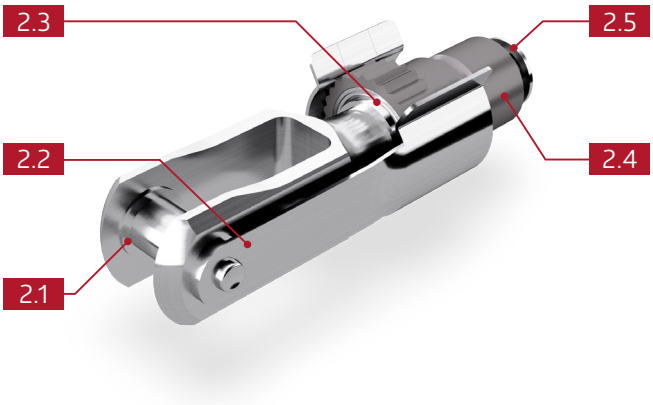

2.1

Bushes

- Aids better load transmission.
- Higher surface pressure possible.
- Through change of geometry
- (boring/width) modular structure with same geometry of fork possible.

2.2

Locking clip

Quick-locking mechanism for assembly by hand. Serves as anti-twist plate and aids in transmission of loads.

2.3

Rubber ring

Prevents penetration of water and dust into rod assembly.

2.4

Titan insert

Aids in transmission of loads. Titan prevents corrosion in thread.

2.5

Safety ring

Prevents and controls too far turning off the thread.

TIE ROD ACC. TO EN4695 GMT-NO.

Traceparts

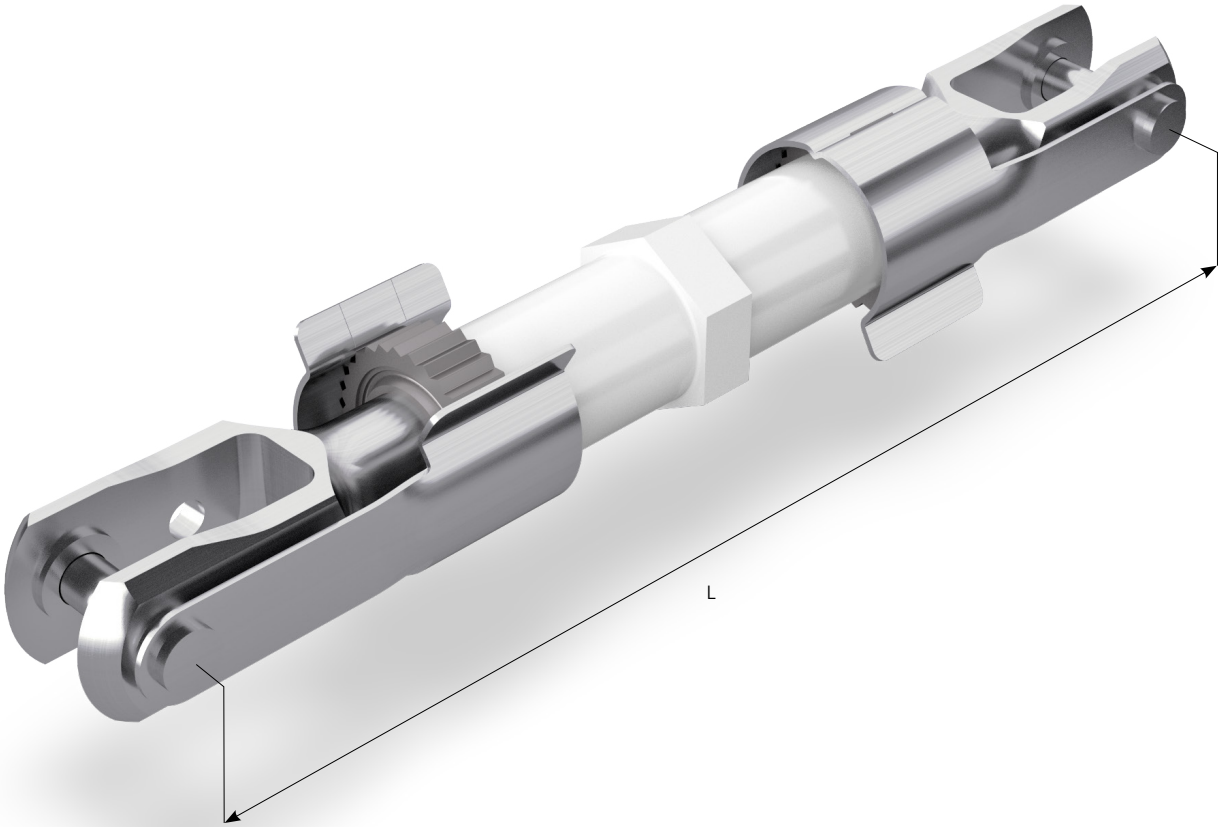

SPECIAL PARTS

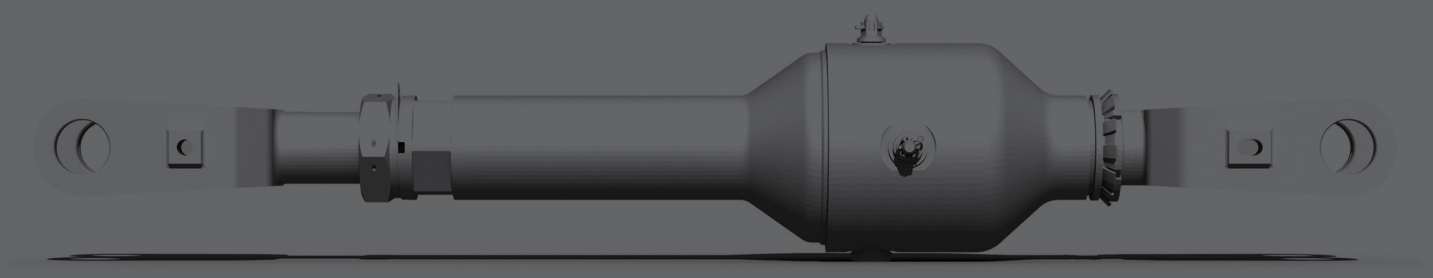

TABLE OF CONTENTS

- S19 Full Titanium Rod 159
- Fairing Failsafe Strut 160
- Rotating Rod 161
- Drive Strut 162
- Carbon Fibre Floor Beam Strut 163
- Self Locking Strut 164
- A320 Y-Tie Rod 165
- Carbon Fibre Rod 166
- Fixed Stainless Steel Rod 167
- Adjustable Stainless Steel Rod 168
- Fixed Aluminium Rod 169
- Folding Strut 170
- Door Rod 171

S19 FULL TITANIUM ROD GMT-NO. 650299..

Traceparts

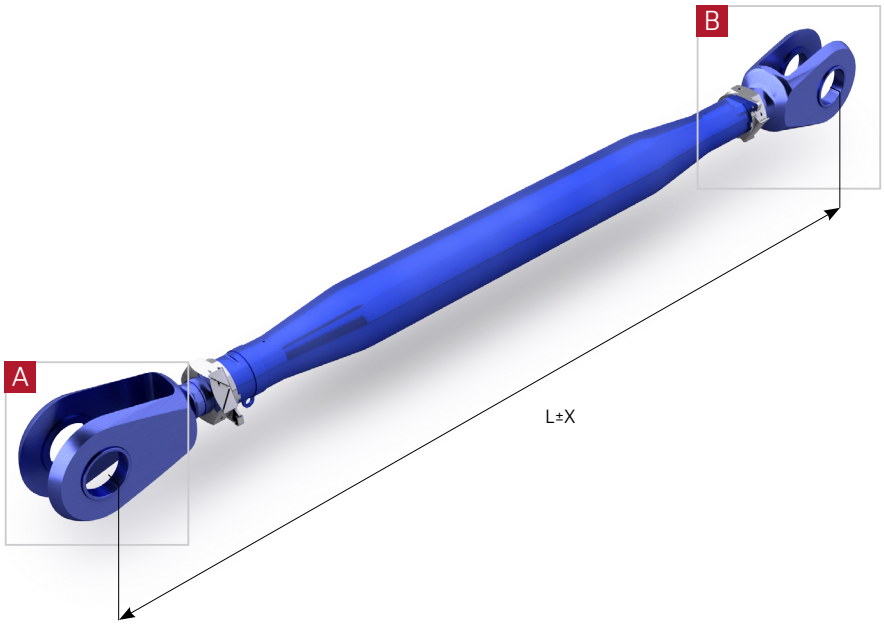

View A

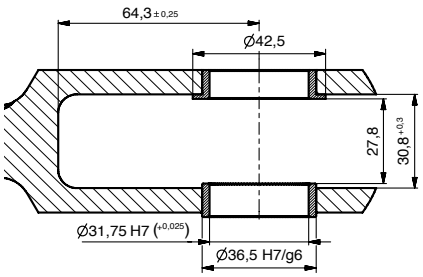

View B

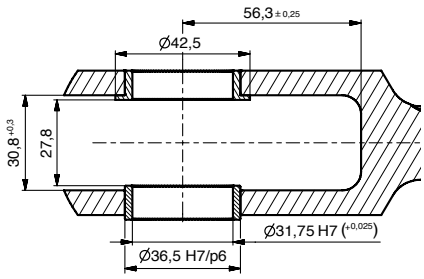

GMT-no.	Ultimate tension load [kN]	Ultimate compression load [kN]	Weight [g]	Rod body outer Ø [mm]	Length L [mm]	Adjustable Range X [mm]	Material Rod body	Material Ends
65029901	270	270	2605	50	739	±8	Ti-6Al-4V	Ti-6Al-4V
65029902	270	270	2413	50	657	±8	Ti-6Al-4V	Ti-6Al-4V

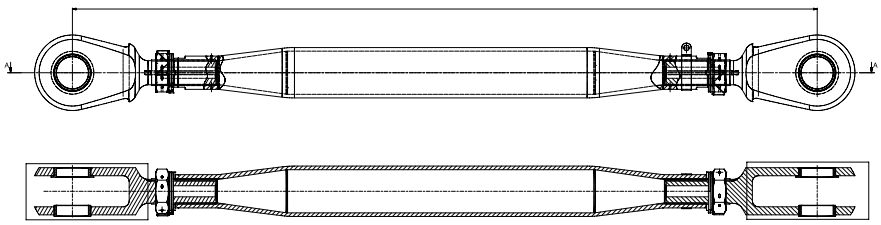

Example of use

Fig. 1 shows the assembled condition of full titanium tie rods in the fuselage.
The 4 tie rods enforce the fuselage in the area of the horizontal and vertical tail.

Fig.1

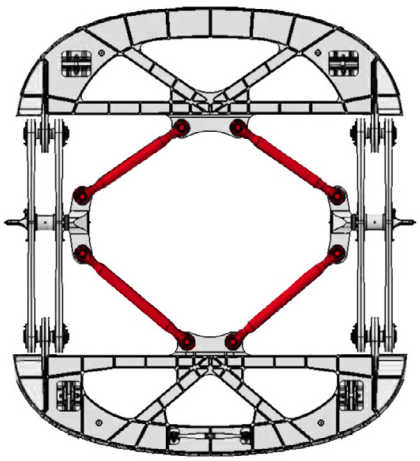

FAIRING FAILSAFE STRUT GMT-NO. 650405..

Traceparts

Patented design

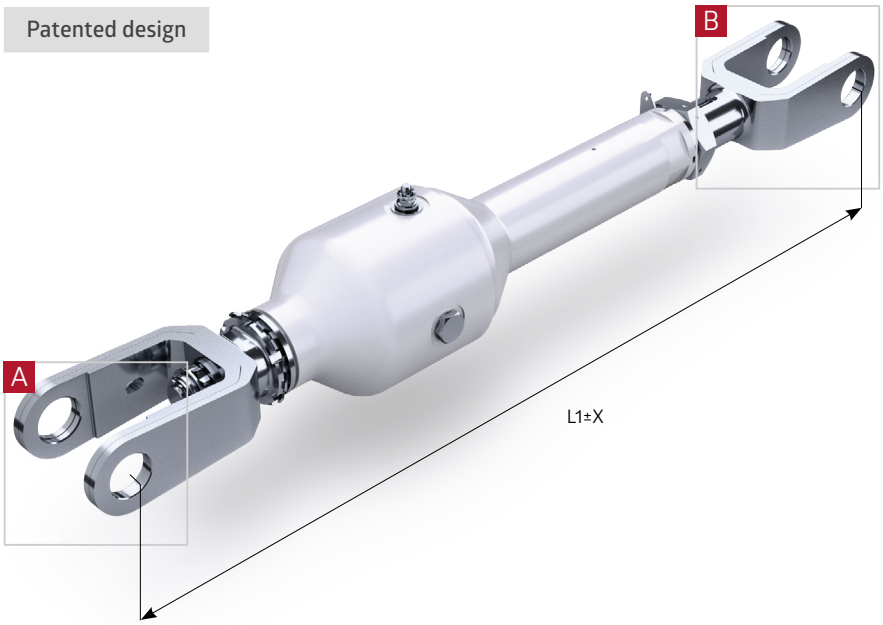

View A

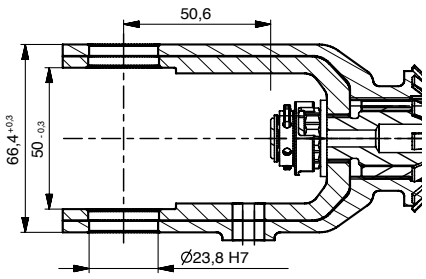

View B

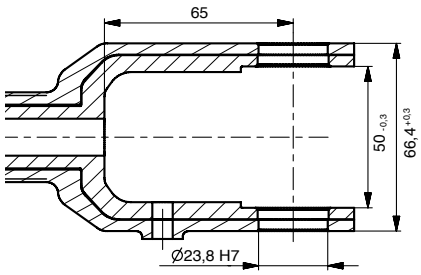

GMT-no.	Ultimate tension load [kN]	Ultimate compres-sion load [kN]	Weight [g]	Rod body Ø D1 [mm]	Rod body Ø D2 [mm]	Length L1 [mm]	Adjustable Range X [mm]	Length L2 [mm]	Length L3 [mm]	Material Rod body	Material Ends
65040501	24	24	4233	46	92	475	±30	212	123	AL 3.1354	CRES 1.4545
65040502	24	24	4377	46	92	548	±30	285	123	AL 3.1354	CRES 1.4545
65040503	24	24	4700	46	92	702	±30	439	123	AL 3.1354	CRES 1.4545

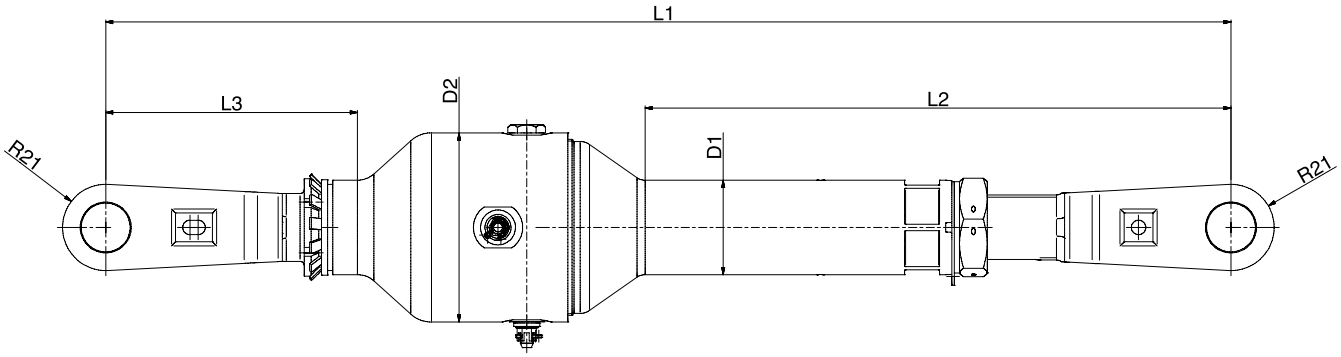

Example of use

The fairing failsafe strut is used to fix the fairings which are covering the flap drive under the wing. The strut has two load paths, so if one load path fails the other path is able to transmit the operating loads.

With the special construction it is possible to adjust the strut in length at the assembled position.

ROTATING ROD GMT-NO. 65029801

Traceparts

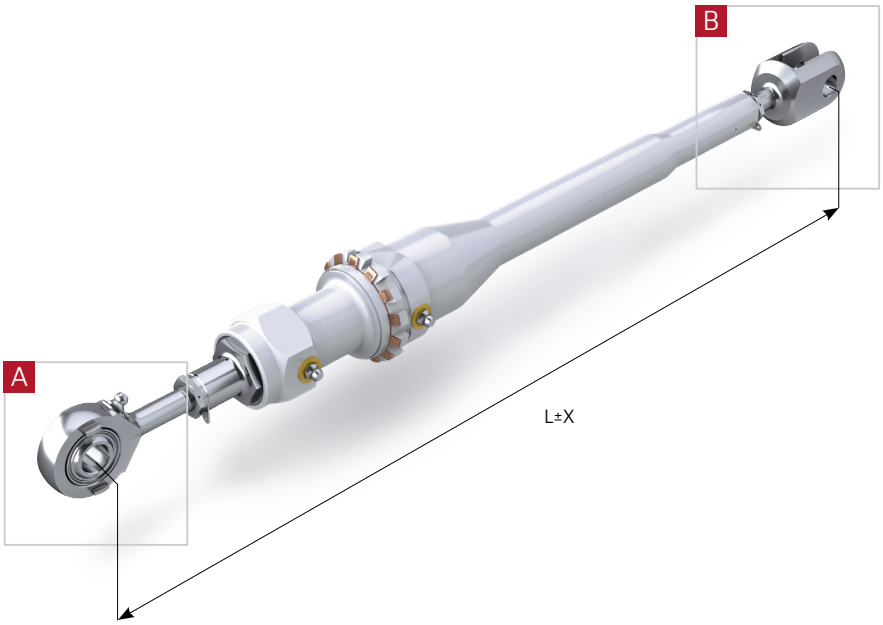

View A

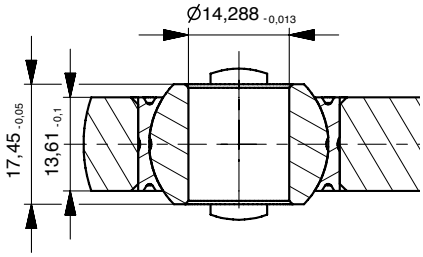

View B

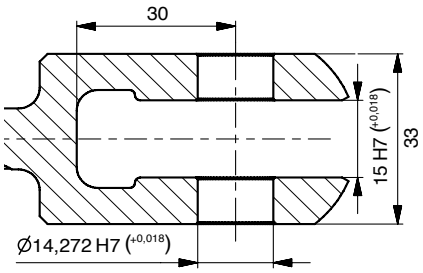

GMT-no.	Ultimate tension load [kN]	Ultimate compression load [kN]	Weight [g]	Rod-Ø D1 [mm]	Rod-Ø D2 [mm]	Rod-Ø D3 [mm]	Length L [mm]	Adjustable Range X [mm]	Material Rod body	Material Ends
65029801	40	17	1489	60	47	28	532,6	±10	AL 3.1354	CRES 1.4545

Example of use

The rotating rod opens and closes the landing gear door of the nose gear. There is an axial rotatory motion in the component during each opening and closing operation.

This function is done by integrated shaft mounted in needle bearings.

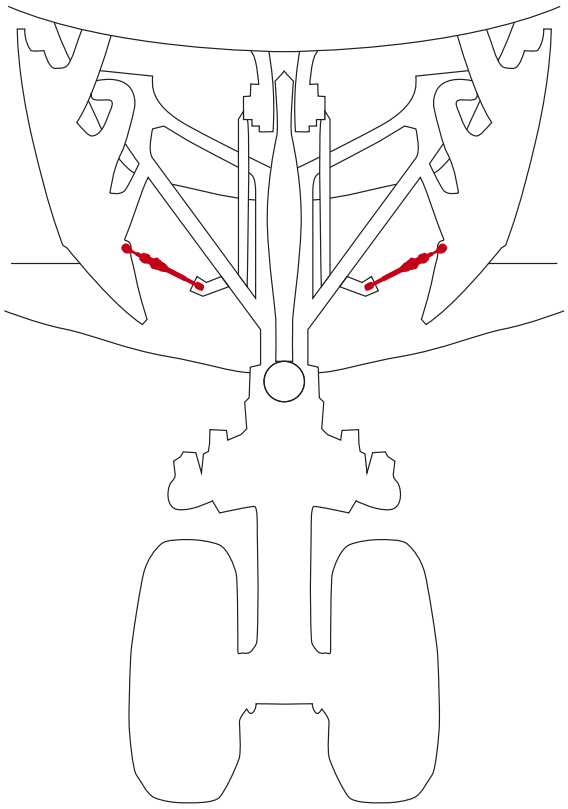

DRIVE STRUT GMT-NO. 65035903

Traceparts

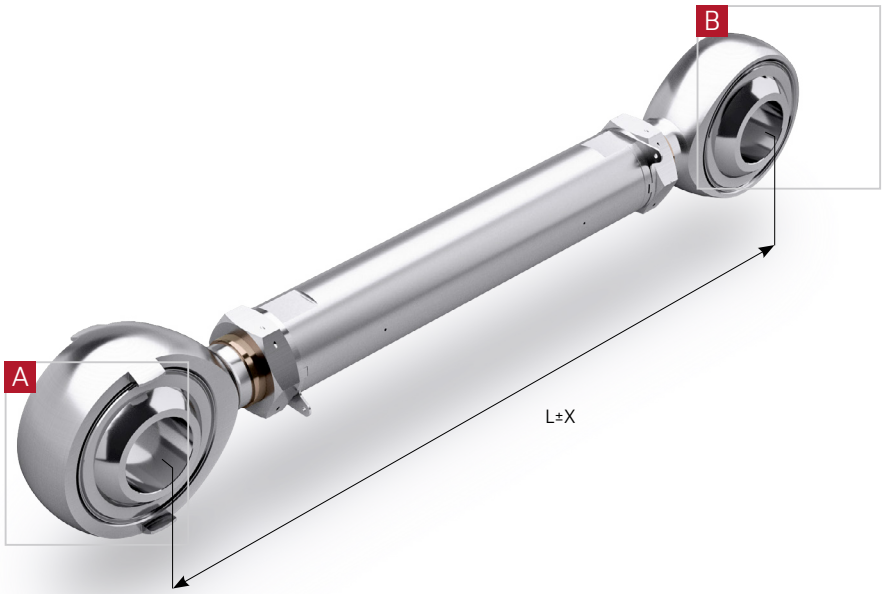

View A

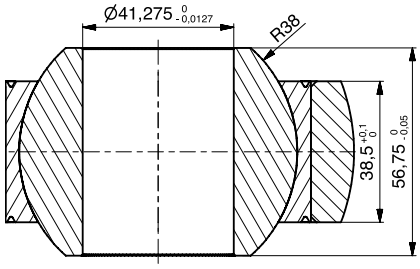

View B

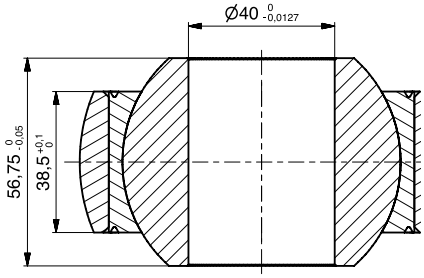

GMT-no.	Ultimate tension load [kN]	Ultimate compression load [kN]	Weight [g]	Rod body Ø D1 [mm]	Length L [mm]	Adjustable Range X [mm]	Material Rod body	Material Ends
65035902	70	270	8916	50	456	±12,7	CRES 1.4545	CRES 1.4545

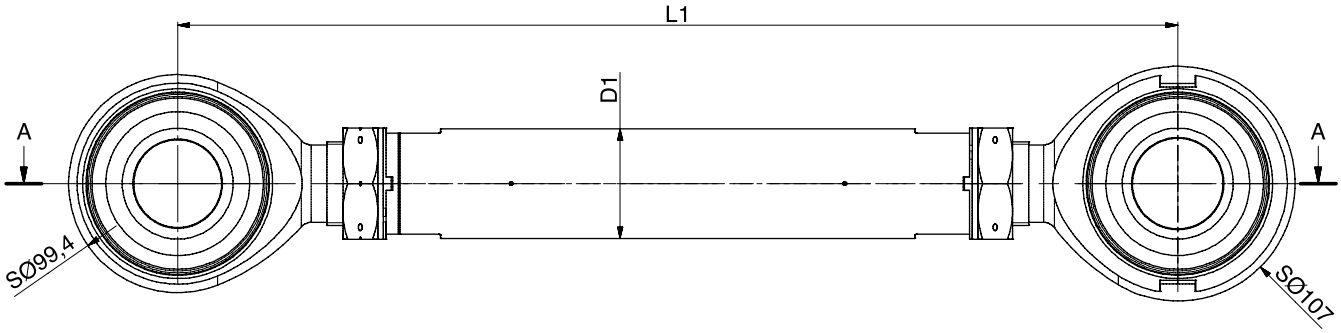

View B View A

Example of use

The flap drive strut transmits the loads between the actuator and the flap. The strut has special spherical plain bearings with a liner which has a very low friction at low temperature.

CARBON FIBRE FLOOR BEAM STRUT GMT-NO. 65051601

Traceparts

Patented design

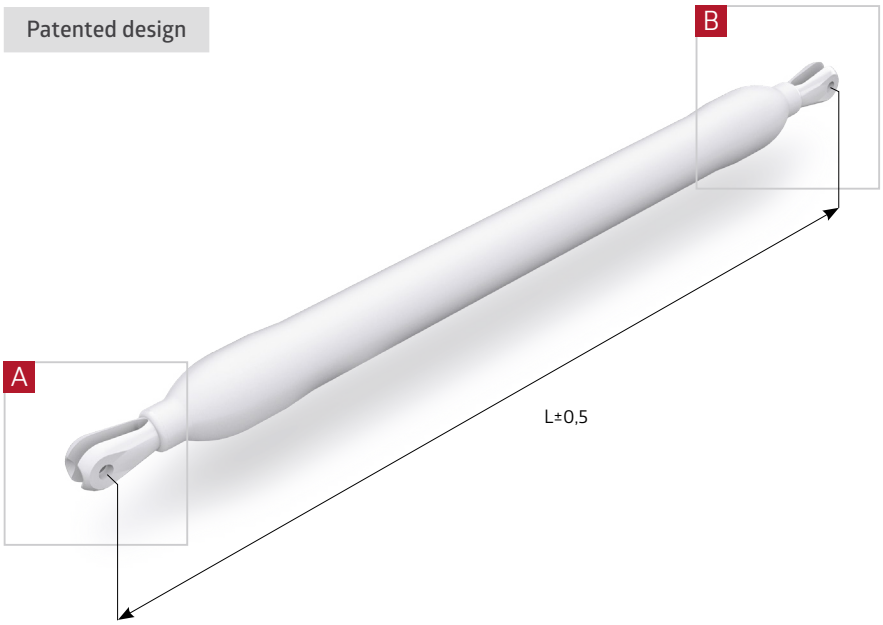

View A

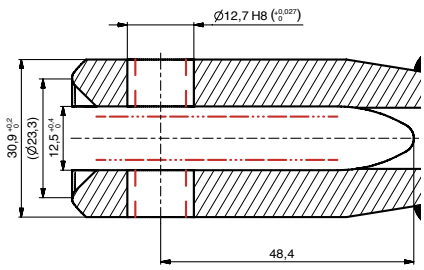

View B

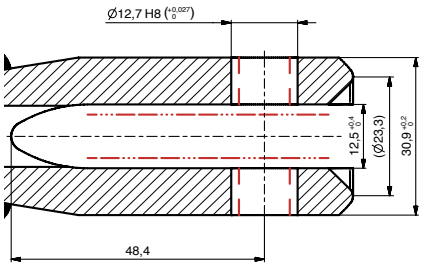

GMT-no.	Ultimate tension load [kN]	Ultimate compression load [kN]	Weight [g]	Rod body outer Ø [mm]	Length L [mm]	Material Rod body	Material Ends
65051601	50	80,8	1152,9	60	886	CFRP	AL 3.4364

Example of use

The floor beam struts are used as structural parts. They reduce the bending length of the floor beam and reinforce the fuselage.

Customized strut with different length and adapted rod body for different load requirements are possible.

Option: Struts with high impact level with rubber layer between CFRP layer

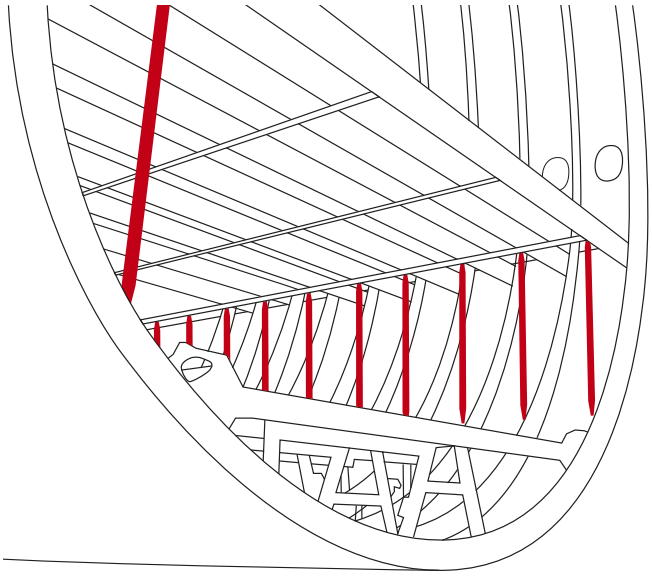

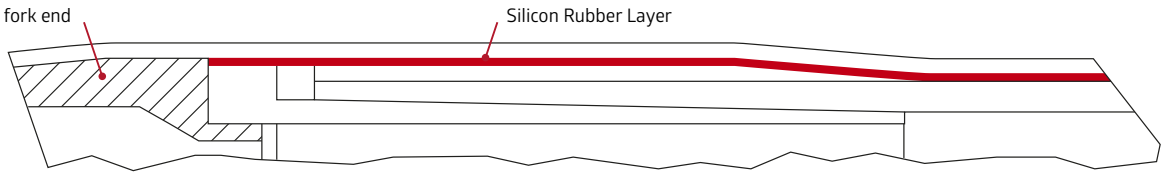

SELF LOCKING STRUT GMT-NO. 65030501

Traceparts

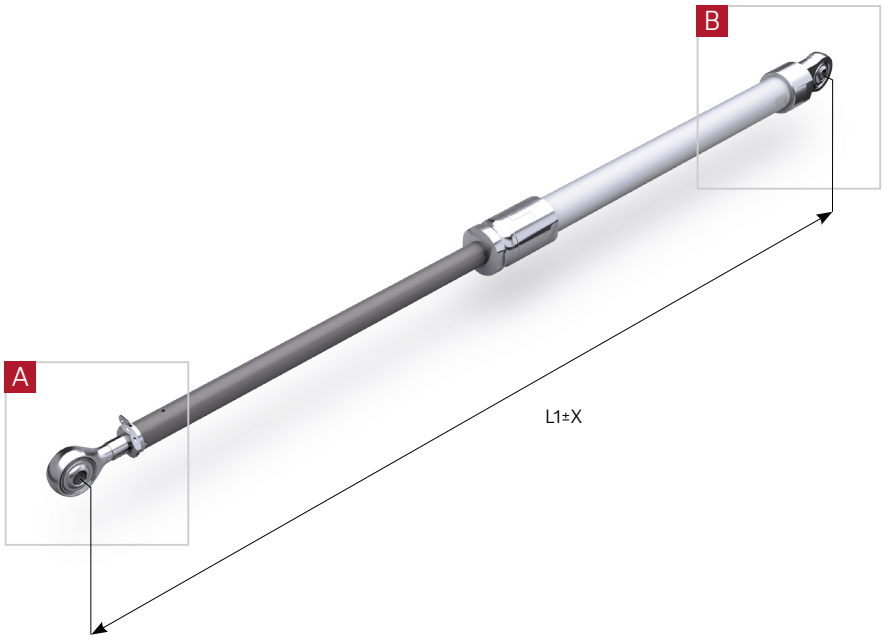

View A

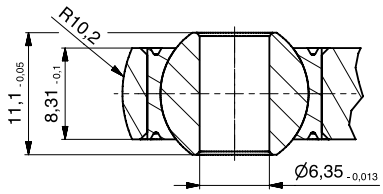

View B

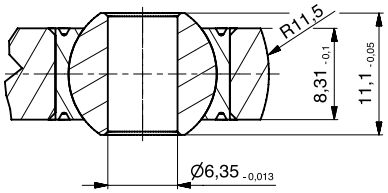

GMT-no.	Ultimate tension load [kN]	Ultimate compression load [kN]	Weight [g]	Rod-Ø D1 [mm]	Rod-Ø D2 [mm]	Rod-Ø D3 [mm]	Length L1 [mm]	Adjustable Range X [mm]	Length L1* [mm]	Length L2 [mm]	Material Rod body	Material Ends
65030501	3,5	3,5	293	19	25	12	500	±10	303	226	AL 3.1354	CRES 1.4545

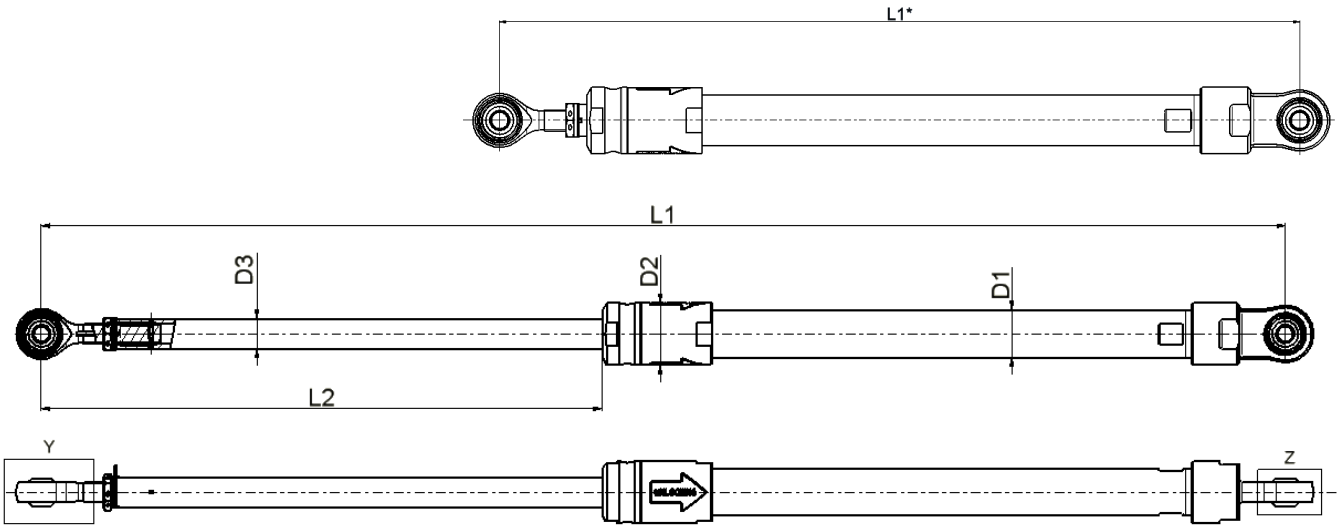

Example of use

The purpose of the extensible self locking strut is to hold in an opened position each door in order to procure access for equipment/system maintenance. When the access panel is open, the strut locks automatically at fully extended position. Unlocking is done manually.

A320 Y-TIE ROD GMT-NO. 65064001

Traceparts

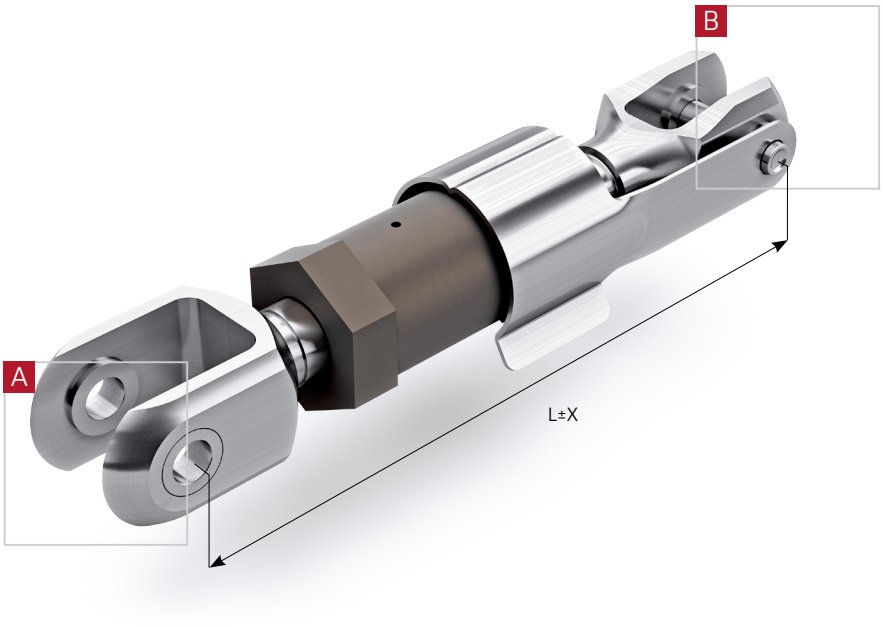

View A

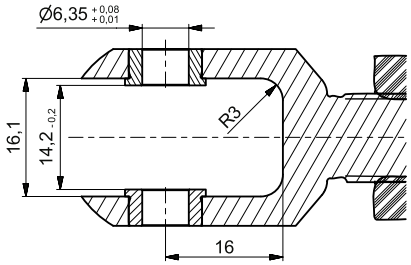

View B

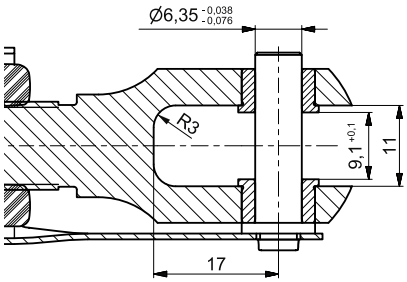

GMT-no.	Ultimate tension load [kN]	Ultimate compression load [kN]	Weight [g]	Rod body outer Ø [mm]	Length L [mm]	Adjustable Range X [mm]	Material Rod body	Material Ends
65064001	7	16	94,5	22	115	±7,5	PPS GF40	AL 3.1354

Example of use

The tie rod is used to fix the overhead compartments in the cabin. They transmit the tension and compression loads in y- direction transverse to the flight direction.

CARBON FIBRE ROD GMT-NO. 650092..

Traceparts

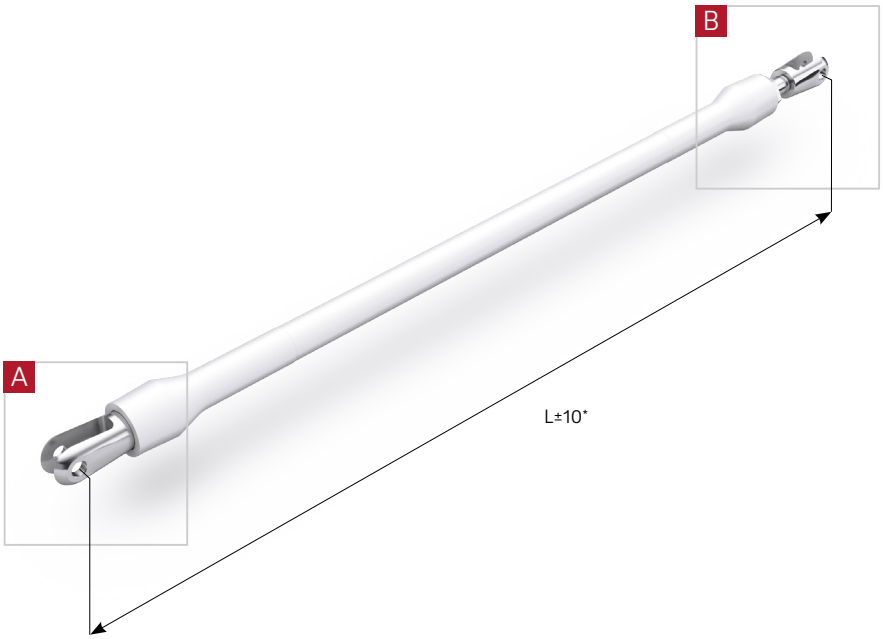

View A

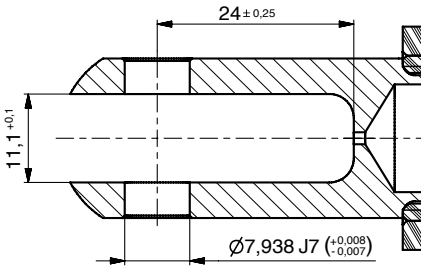

View B

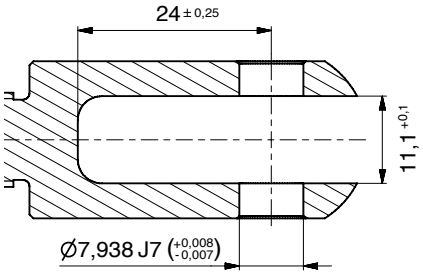

* adjustable range [mm]

GMT-no.	Ultimate tension load [kN]	Ultimate compression load [kN]	Weight [g]	Rod body outer Ø [mm]	Length L [mm]	Material Rod body	Material Ends
65009205	16,5	8,2	180	19	621	CFRP	AL 3.1354
65009206	15	7,5	172	19	570	CFRP	AL 3.1354
65009207	15	7,5	170	19	549	CFRP	AL 3.1354
65009208	16,5	8,2	176	19	595	CFRP	AL 3.1354
65009405	43,5	22	303	24,5	621	CFRP	AL 3.1354
65009406	40	20	285	24,5	549	CFRP	AL 3.1354
65009407	40	20	290	24,5	570	CFRP	AL 3.1354
65009408	43,5	22	297	24,5	595	CFRP	AL 3.1354

Example of use

The tie rod is used to fix the bulk head of the upper deck of the A380 aircraft.

FIXED STAINLESS STEEL ROD GMT-NO. 65032301

Traceparts

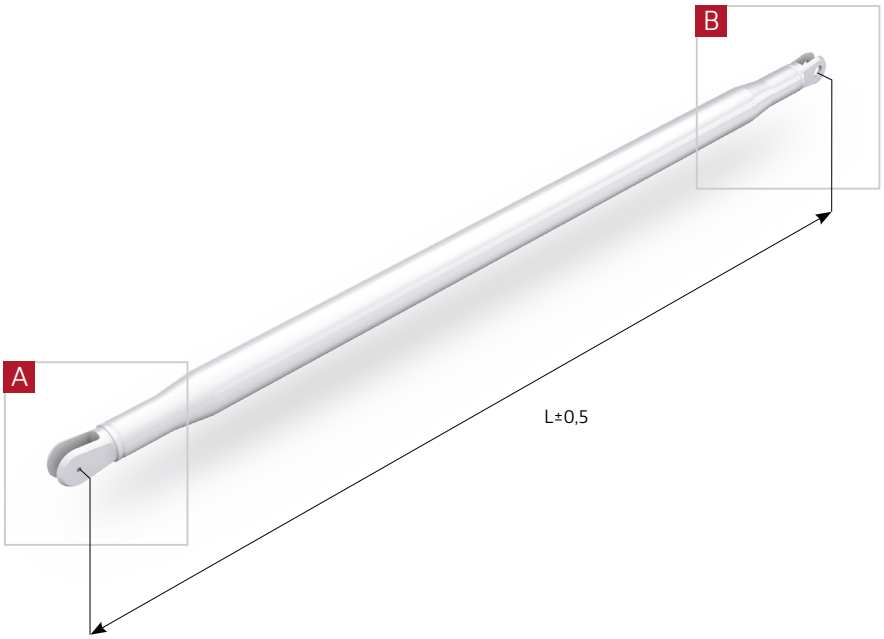

View A

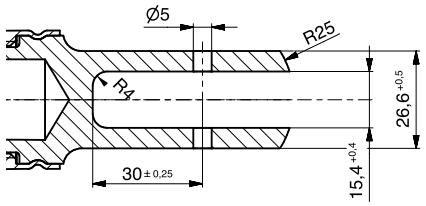

View B

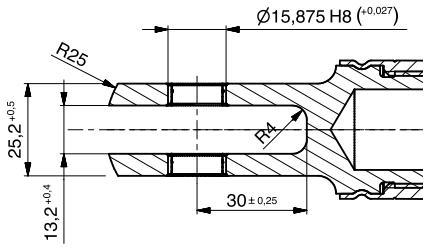

GMT-no.	Ultimate tension load [kN]	Ultimate compression load [kN]	Weight [g]	Rod body Ø D [mm]	Length L [mm]	Material Rod body	Material Ends
65032301	175	175	4879	48,3	1133,5	CRES 1.4314	CRES 1.4545

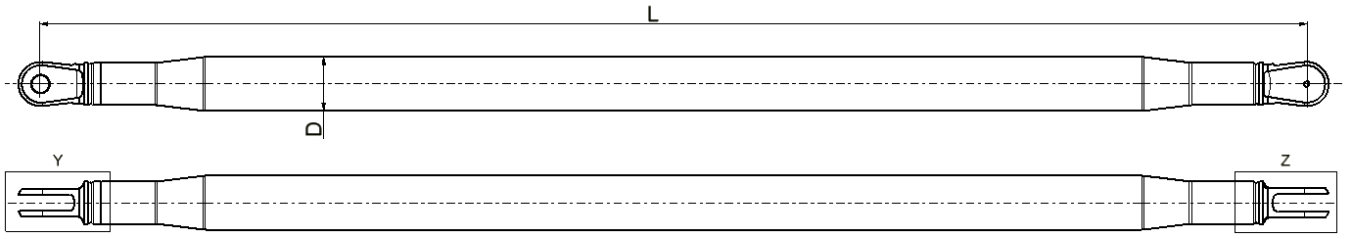

View B

View A

Example of use

Structural part

ADJUSTABLE STAINLESS STEEL ROD GMT-NO. 65032201

Traceparts

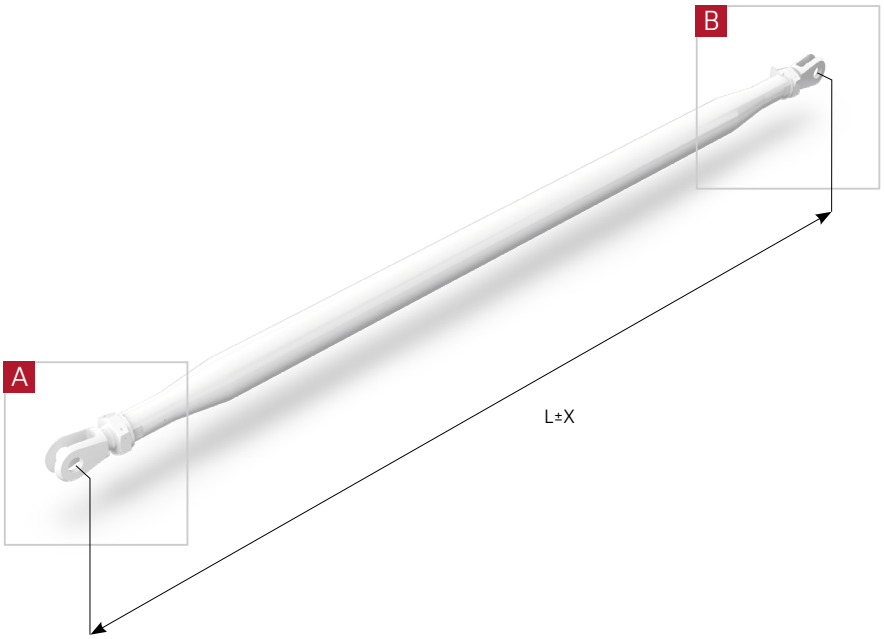

View A

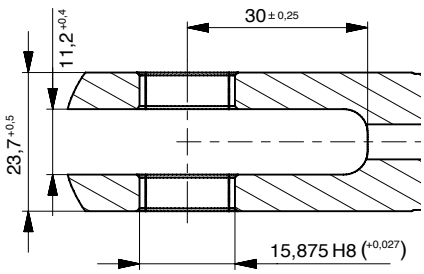

View B

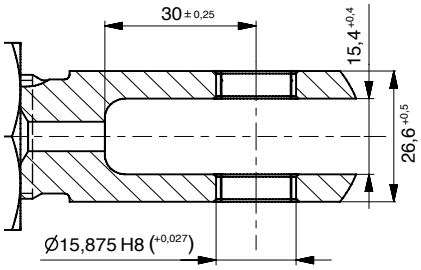

GMT-no.	Ultimate tension load [kN]	Ultimate compression load [kN]	Weight [g]	Rod body outer Ø [mm]	Length L [mm]	Adjustable Range X [mm]	Material Rod body	Material Ends
65032201	130	130	4343	47,1	1158	±3	CRES 1.4314	CRES 1,4545

Example of use

Structural part

FIXED ALUMINIUM ROD GMT-NO. 650324..

Traceparts

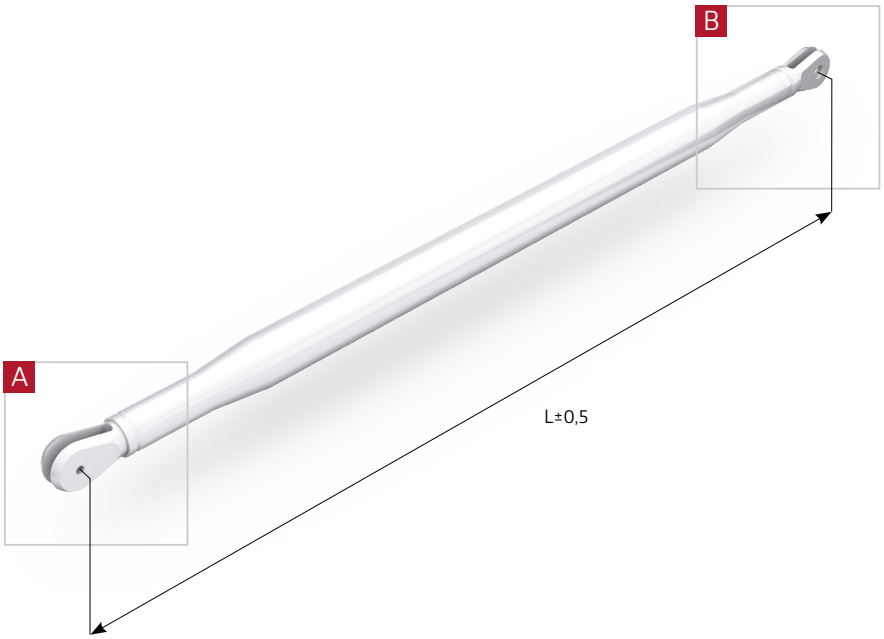

View A

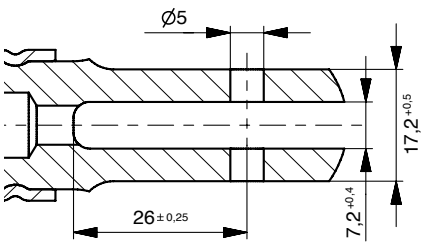

View B

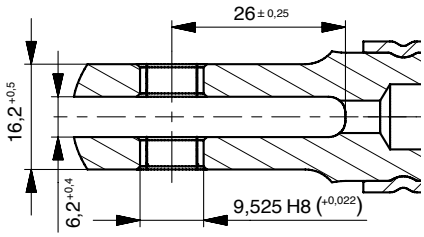

GMT-no.	Ultimate tension load [kN]	Ultimate compression load [kN]	Weight [g]	Rod body Ø D [mm]	Length L [mm]	Material Rod body	Material Ends
65032401	35	35	425	31	625,2	AL 3.1354	AL 3.1354
65032501	30	30	195	22,2	284,6	AL 3.1354	AL 3.1354

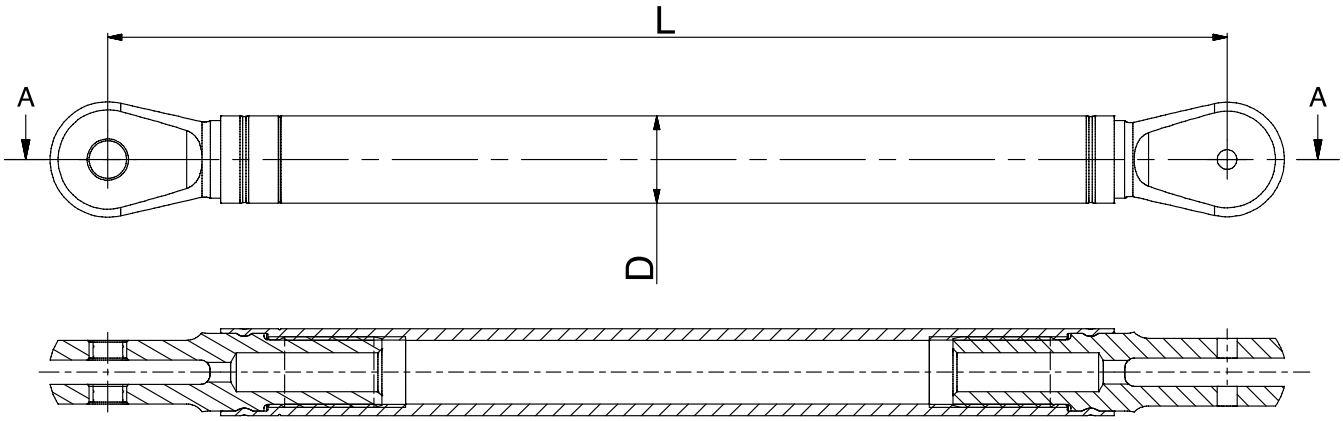

Example of use

Structural part

FOLDING STRUT GMT-NO. 65016001

Traceparts

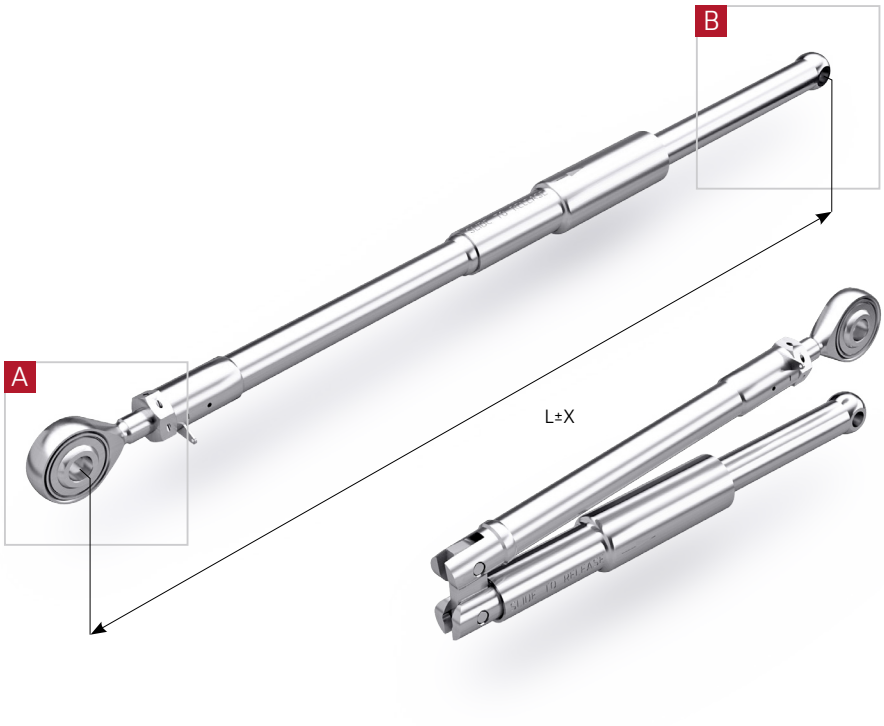

View A

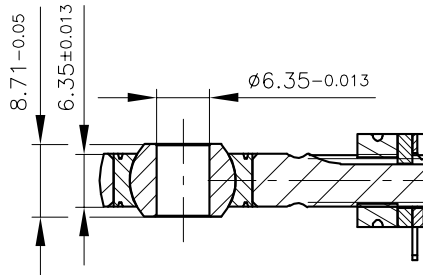

View B

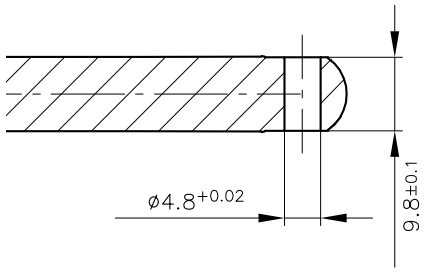

GMT-no.	Weight [g]	Rod-Ø D1 [mm]	Length L [mm]	Adjustable Range X [mm]	Material Rod body	Material Ends
65016001	221	10	280	±6	CRES 1.4548	CRES 1.4548

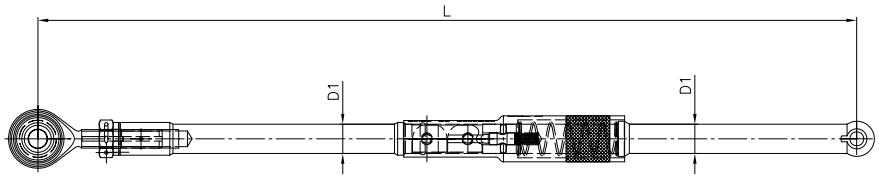

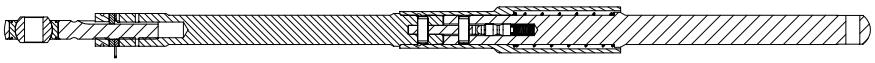

Example of use

The purpose of the folding strut is to hold in an opened position each door in order to procure access for equipment/system maintenance. When the access panel is open, the strut locks automatically at fully extended position. Unlocking is done manually.

DOOR ROD GMT-NO. 650192..

Traceparts

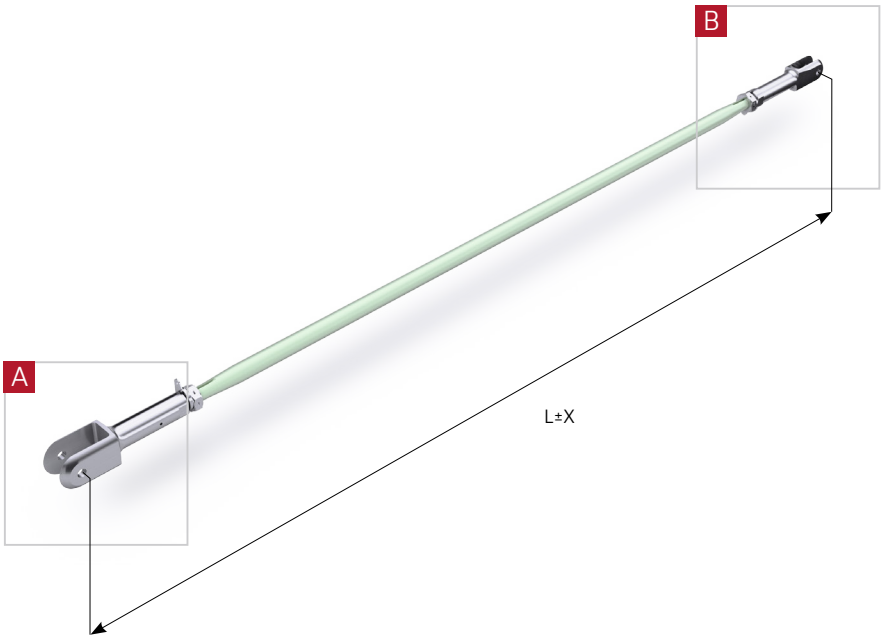

View A

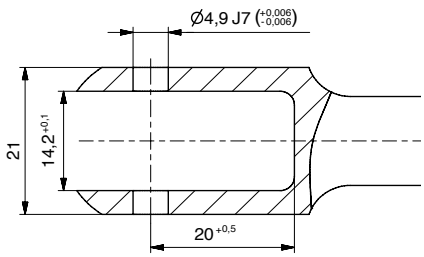

View B

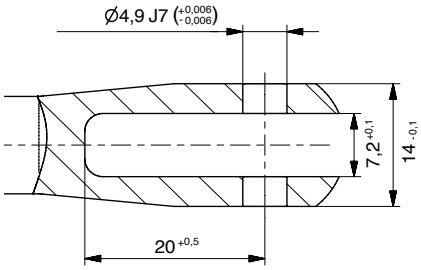

GMT-no.	Ultimate tension load [kN]	Ultimate compression load [kN]	Weight [g]	Rod body Ø D [mm]	Length L [mm]	Adjustable Range X [mm]	Material Rod	Material Ends
65019201	4,5	0,8	157	10	603	±10	AL 3.1354	AL 3.1354
65019202	4,5	1,0	150	10	596	±10	AL 3.1354	AL 3.1354

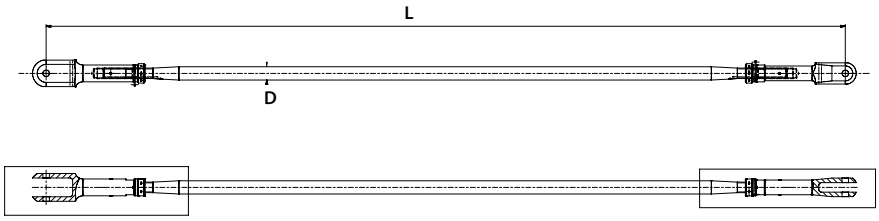

Example of use

The door rods are used to connect the different parts of the locking mechanism of the aircraft door, the design is very light and thin

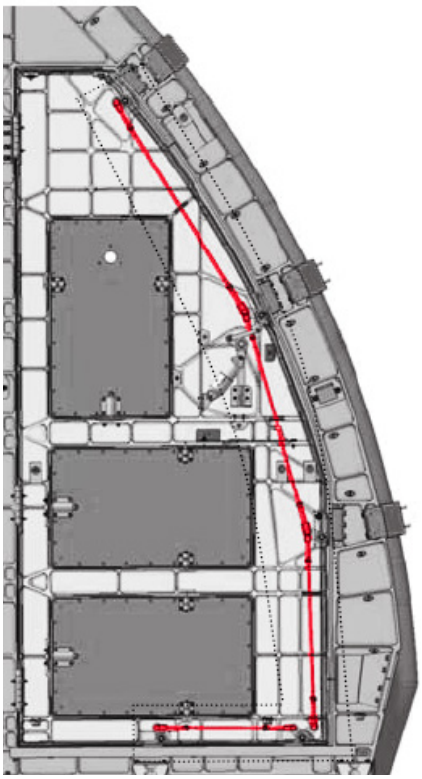

AIRBUS STANDARD

TABLE OF CONTENTS

- ABS2147 Shock Mount (with notch) 174
- ABS2147 Shock Mount 175
- ABS2146 Shock Mount (color coding) 176
- ABS1212 Shock Mount 177
- ABS1186 Shock Mount 178
- ABS1067 Shock Mount 179 - 181
- ABS0757 182 - 183
- ABS0756 184 - 189

DESCRIPTION TO SHOCK MOUNTS AIRBUS STANDARD

Mechanical vibrations and impact stress are the biggest problems for cabin interiors onboard aircrafts. Therefore very specific noise and vibration isolating systems have to be used to isolate interiors from vibrations.

GMT designs special purpose shockmounts offering high deflection whilst being able to absorb shock loads.

Mountings with incorporated rebound control features reduce excessive movement under shock loads.

Shockmounts are mainly used for interior and sub-structure applications (walls, galleys, lavatories, hat racks and other monuments).

Example of use

Mounting of overhead compartment A380 aircraft.

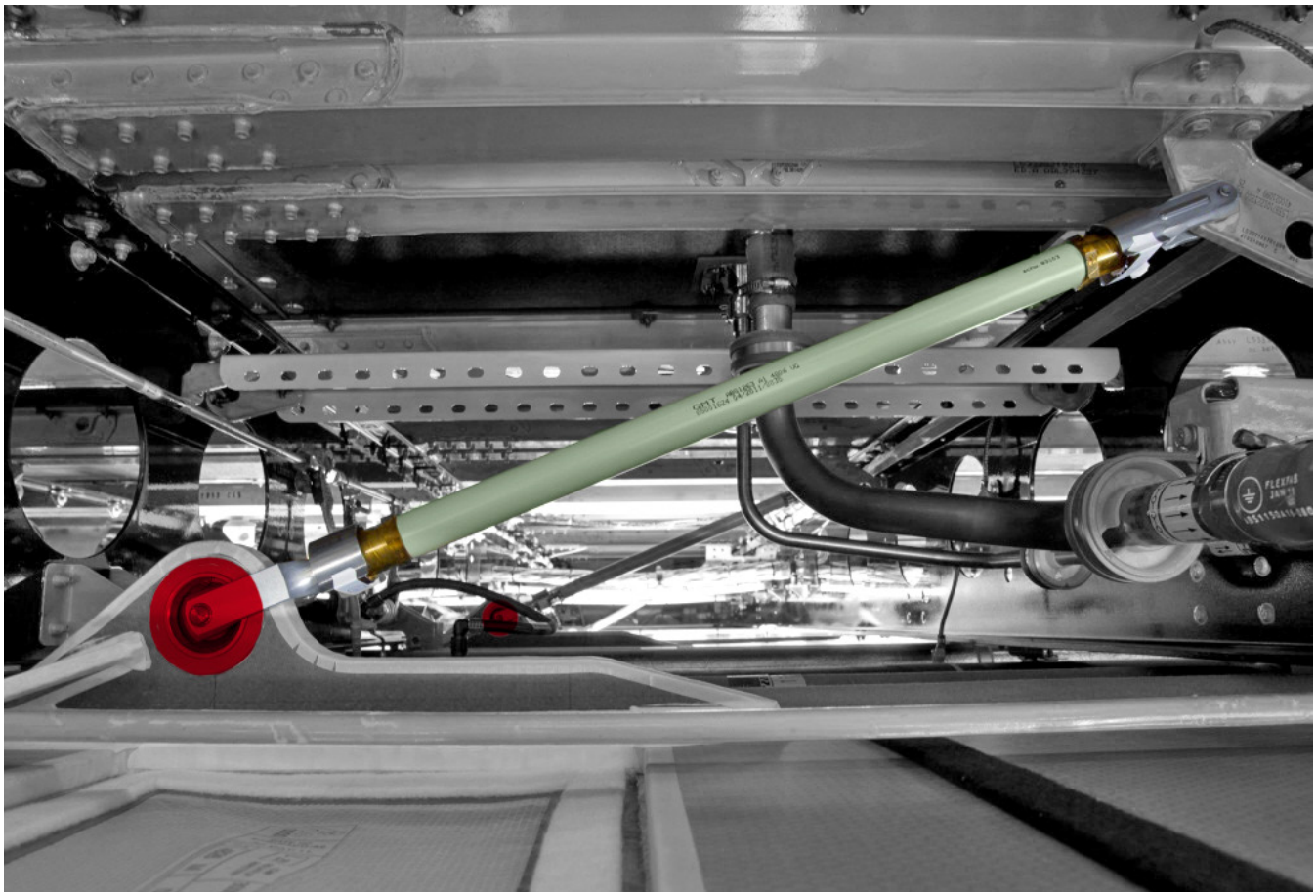

SHOCK MOUNTS ACC. TO ABS2147 GMT-NO. 42016501

Traceparts

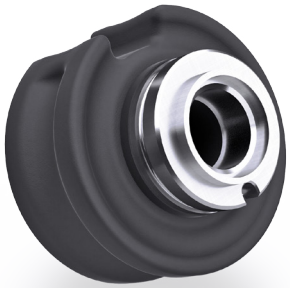

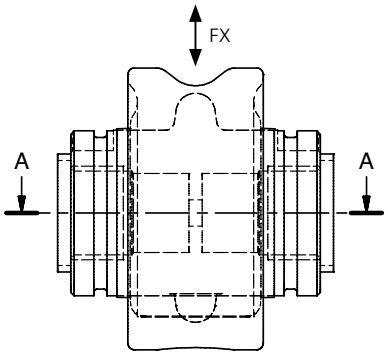

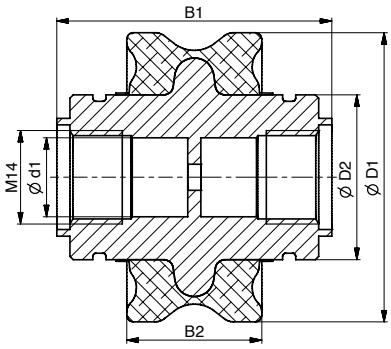

ABS-no.	GMT-no.	Weight [g]	Ø D1	Ø D2	d1 [+0,1]	B1 [±0,1]	B2
ABS2147D01C05	42016501	147,7	44,2	25,7	12,05	42	20,6

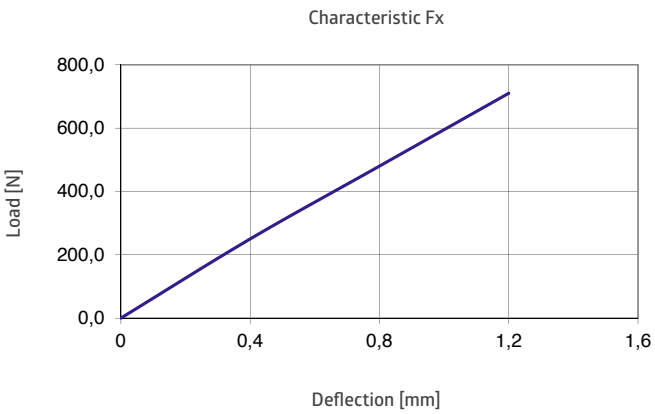

SHOCK MOUNTS ACC. TO ABS2147 GMT-NO. 42017501

Traceparts

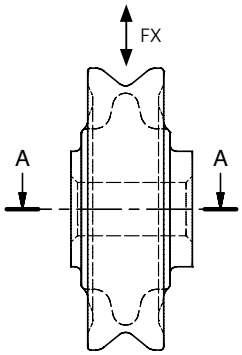

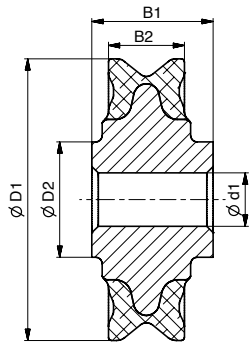

ABS-no.	GMT-no.	Weight [g]	Ø D1	Ø D2 [+0,1]	d1 [+0,04 -0,02]	B1	B2
ABS2147-SM2147A03A02	42017501	33,801	43,9	18	8,3	18,9	11,85

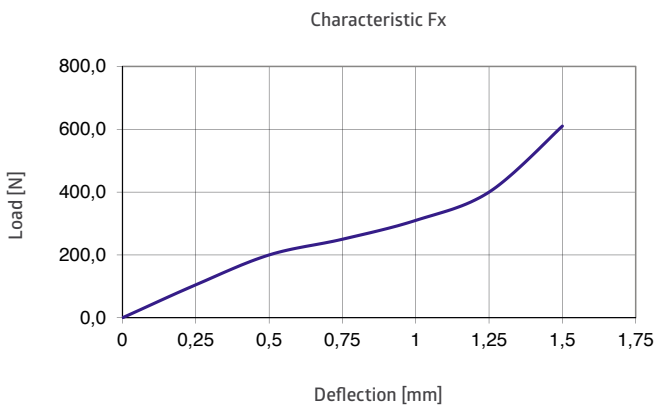

SHOCK MOUNTS ACC. TO
ABS2146 (COLOR CODING) GMT-NO. 96055502

Traceparts

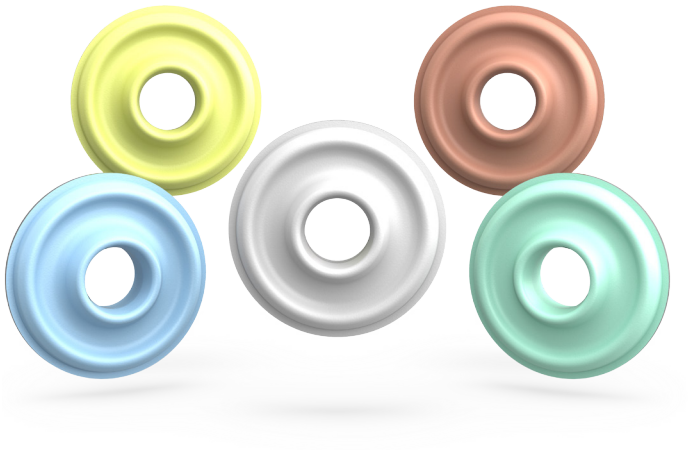

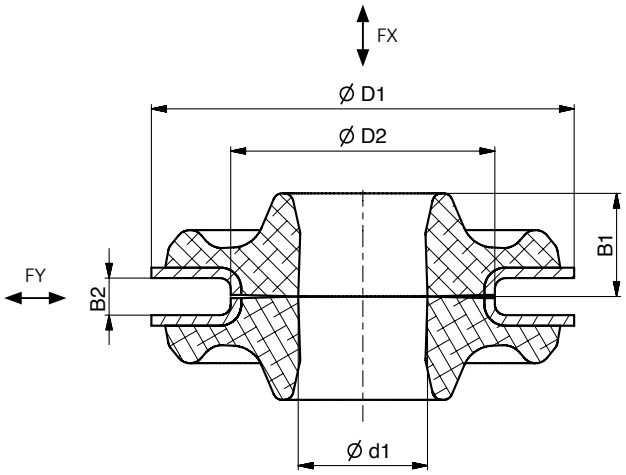

ABS-no.	GMT-no.	Weight [g]	Ø D1	Ø D2 [+0,1 -0,05]	Ø d1	B1 [+0,2 -0,1]	B2
ABS2146 L 040 A	96055502	3,22	20	12,5	6,12	4,9	1,75

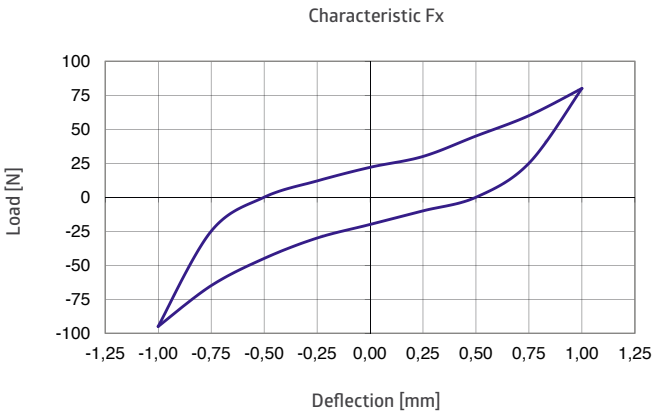

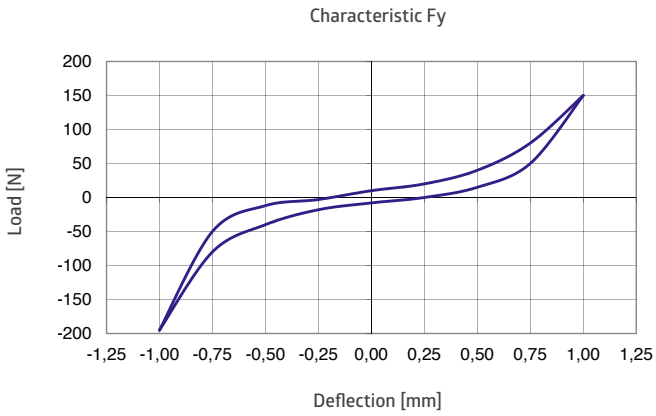

Example of use

Mounting of sidewall and ceiling panels in the cabin of A350XWB aircraft.

SHOCK MOUNTS ACC. TO ABS1212 GMT-NO. 65003401

Traceparts

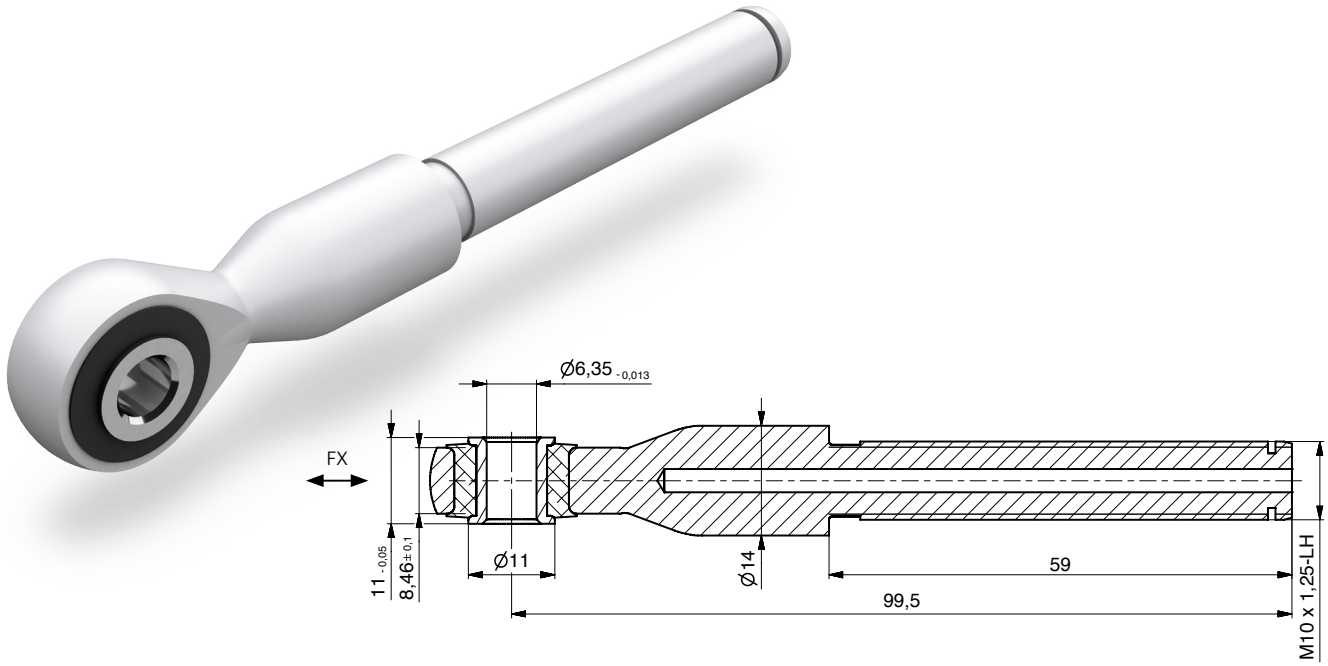

ABS-no.	GMT-no.	Weight [g]	Length [mm]
ABS1212 A 01	65003401	29,331	99,5

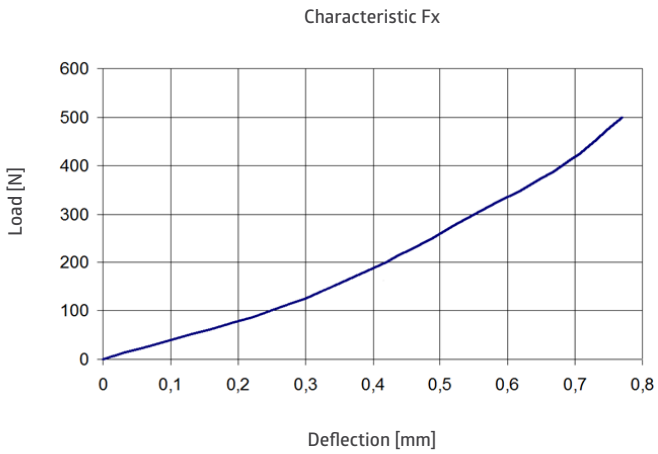

Example of use

Rod end of tie rod ABS 1263 and ABS 1188. Mounting of sidewall panels in the cabin of A380 aircraft.

SHOCK MOUNTS ACC. TO ABS1186 GMT-NO. 592057..

Traceparts

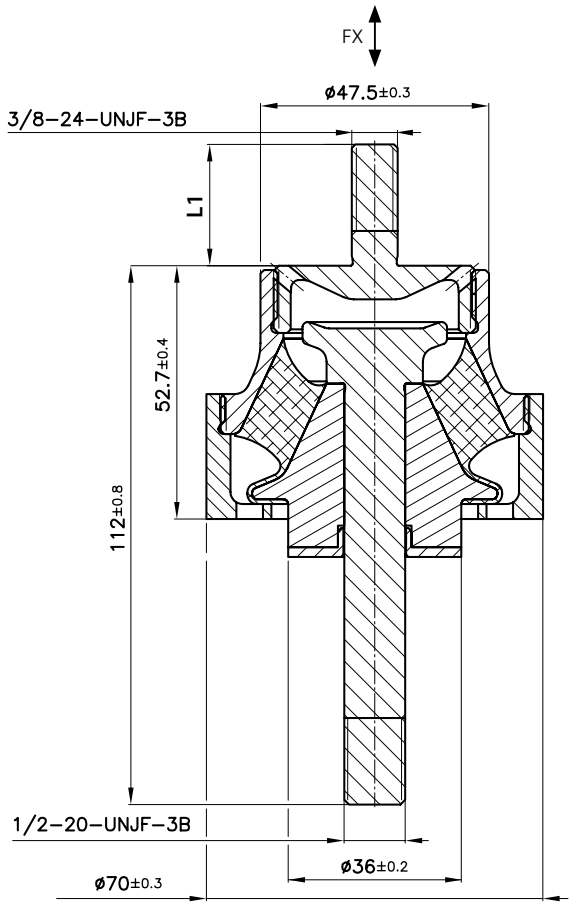

ABS-no.	GMT item number	Weight [g]	Length L1 [mm] [±0,2]
ABS1186 A252 K1	59205701	472	25,2
ABS1186 B272 K1	59205702	473	27,2
ABS1186 A280 K1	59205703	474	28

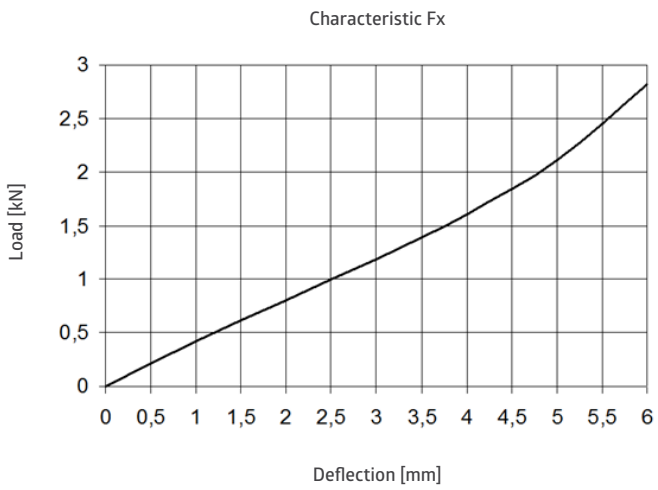

Example of use

Mounting of components for interior fittings of the cabin. To provide the crew members the opportunity of a restorative sleep in the cabin crew rest compartment, it is necessary to keep the noise inside a plane on the lowest possible level. Rubber metal parts are particularly convenient for this purpose as they strongly reduce the acoustic noise generated by the jet engines as well as flow-generated noise.

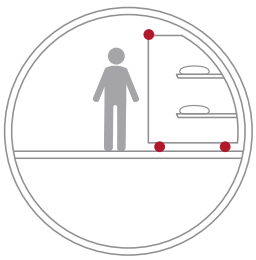

SHOCK MOUNTS ACC. TO ABS1067 GMT-NO. 42007501

Traceparts

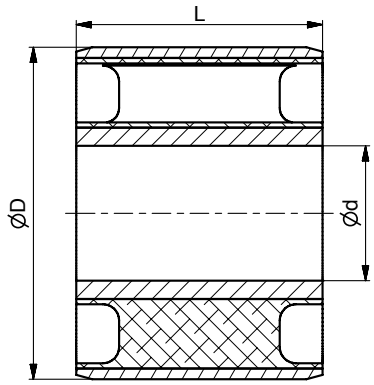

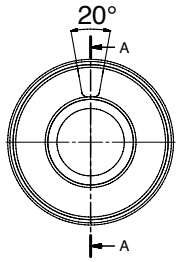

ABS-no.	GMT item number	Length L1 [mm]	Ø d [mm]	Ø D [mm]
ABS1067	420 07501	23-0.1	9.8 H7	29 r6

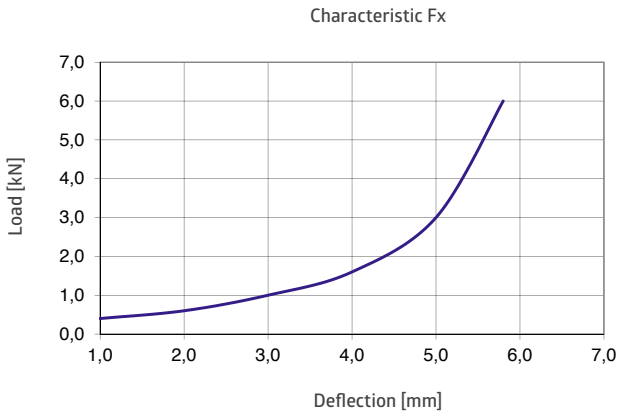

SHOCK MOUNTS ACC. TO ABS1067 GMT-NO. 42007601

Traceparts

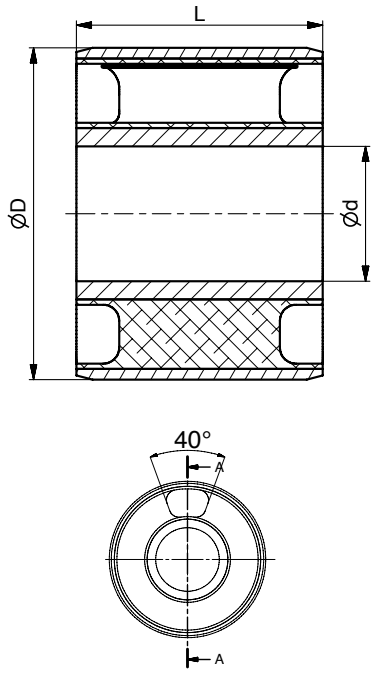

ABS-no.	GMT item number	Length L1 [mm]	Ø d [mm]	Ø D [mm]
ABS1067	420 07601	23-0.1	12.8 H7	31 r6

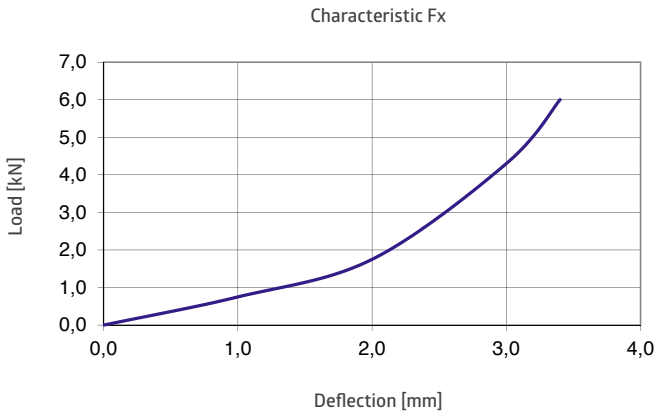

SHOCK MOUNTS ACC. TO ABS1067 GMT-NO. 42007701

Traceparts

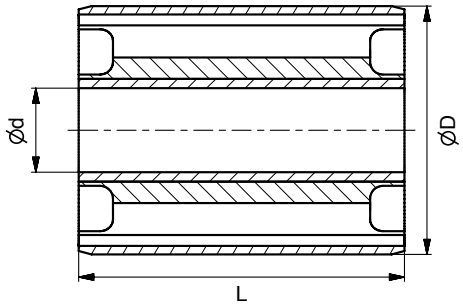

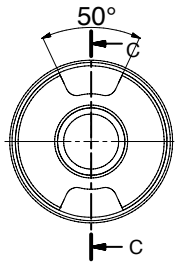

ABS-no.	GMT item number	Length L1 [mm]	Ø d [mm]	Ø D [mm]
ABS1067	420 07701	38-0.1	9.8 H7	29 r6

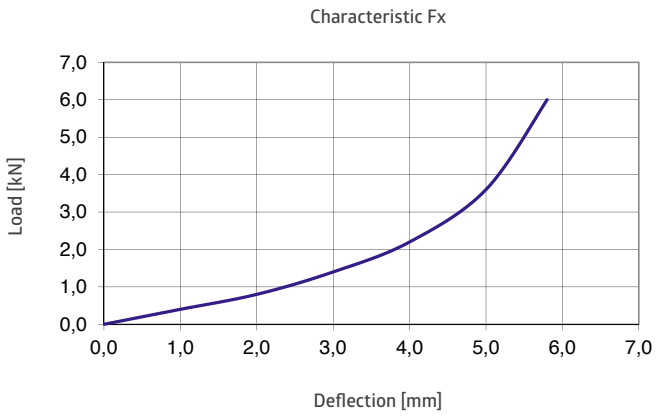

SHOCK MOUNTS ACC. TO ABS0757 GMT-NO. 42009501

Traceparts

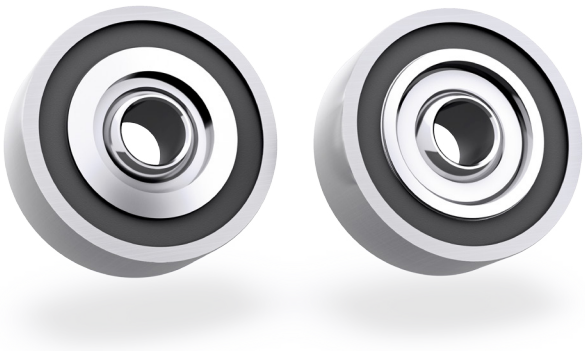

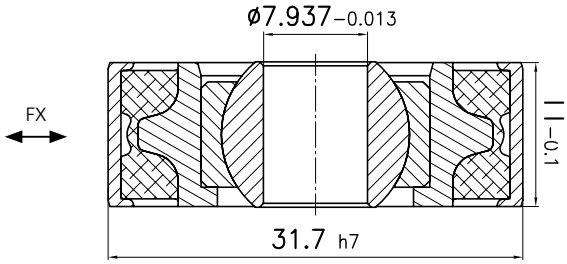

ABS-no.	GMT item number	Radial stiffness [N/mm]
ABS0757 A071	420 09501	approx. 850

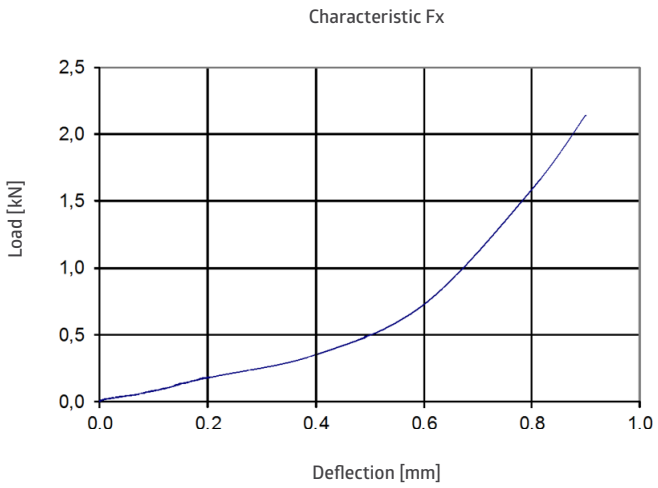

Example of use

Shockmounts are mainly used for interior and sub-structure applications (walls, galleys, lavatories, hat racks and other monuments).

SHOCK MOUNTS ACC. TO ABS0757 GMT-NO. 42009801

Traceparts

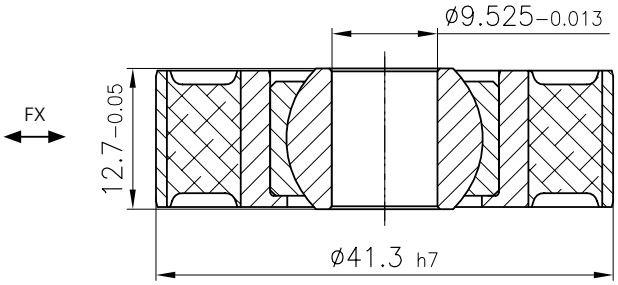

ABS-no.	GMT item number	Radial stiffness [N/mm]
ABS0757 A 091	420 09801	approx. 850

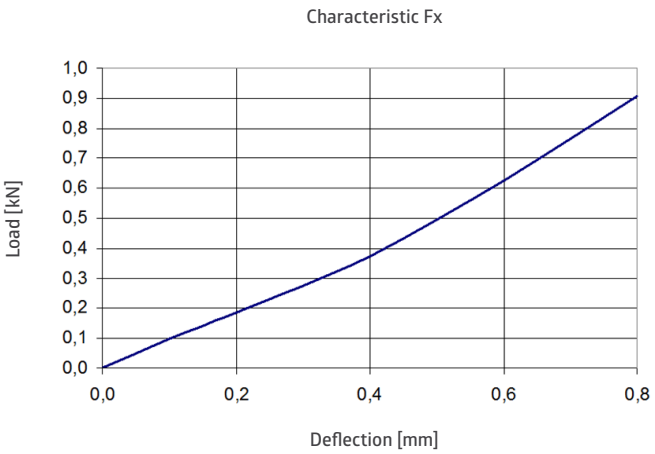

Example of use

Shockmounts are mainly used for interior and sub-structure applications (walls, galleys, lavatories, hat racks and other monuments).

SHOCK MOUNTS ACC. TO ABS0756 GMT-NO. 64003601, 64003701

Traceparts

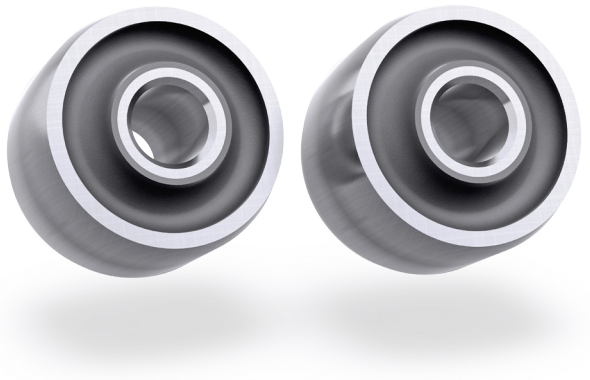

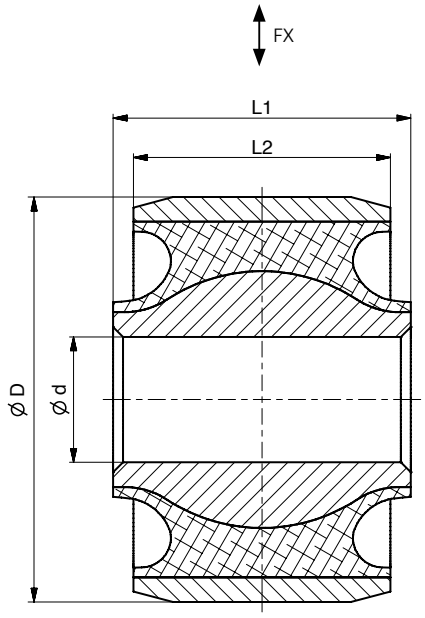

ABS-no.	GMT item number	Length L1 [mm]	Length L2 [mm]	Ø d [mm]	Ø D [mm]	Radial stiffness [N/mm]
ABS0756 SM756000	640 03601	20.65-0.05	18±0.2	9.52-0,013	31.5 h7	31.5 h7
ABS0756 SM756000	640 03701	15.06 -0.05	13±0.2	6.35-0.013	20.5 h7	20.5 h7

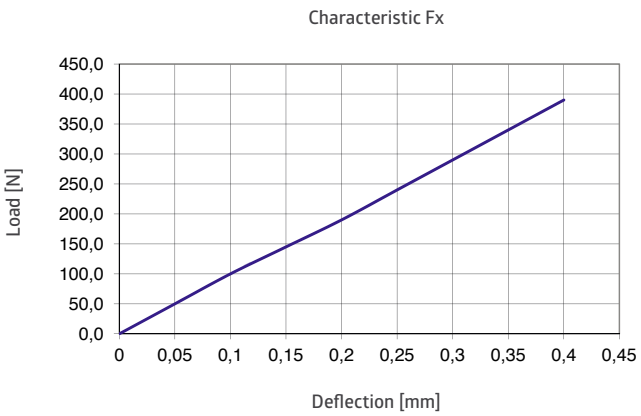

Example of use

Shockmounts are mainly used for interior and sub-structure applications (walls, galleys, lavatories, hat racks and other monuments).

SHOCK MOUNTS ACC. TO ABS0756 GMT-NO. 42009103

Traceparts

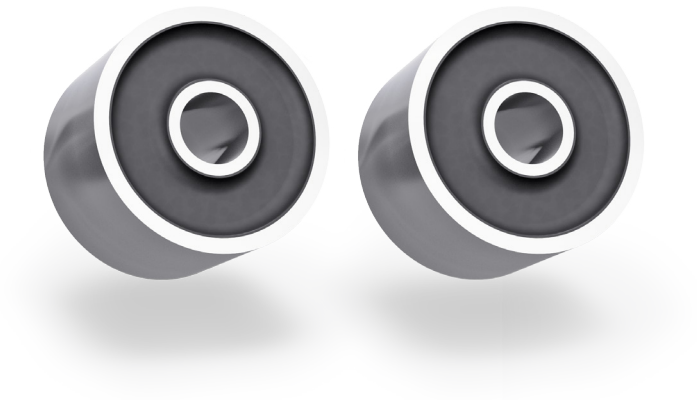

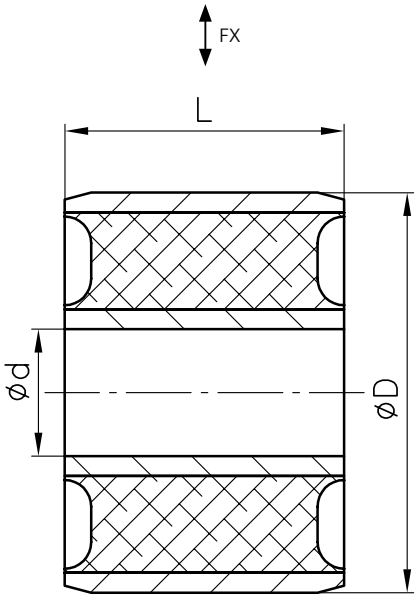

ABS-no.	GMT item number	Length L1 [mm]	Length L2 [mm]	Ø d [mm]	Ø D [mm]	Radial stiffness [N/mm]
ABS0756 A0 95M	420 09101	20.95±0.3	20.95±0.3	9.525-0.013	30 h7	

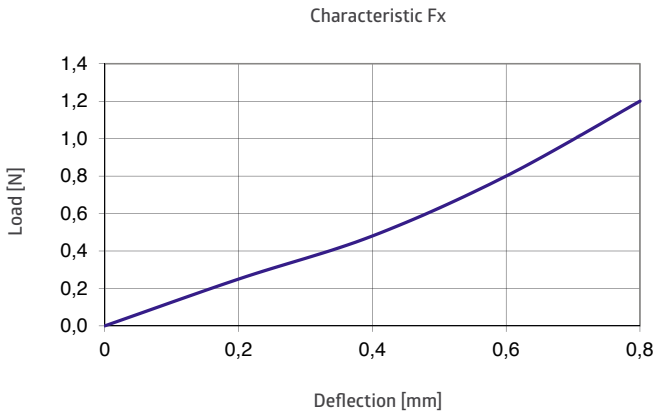

Example of use

Shockmounts are mainly used for interior and sub-structure applications (walls, galleys, lavatories, hat racks and other monuments).

SHOCK MOUNTS ACC. TO ABS0756 GMT-NO. 42009901

Traceparts

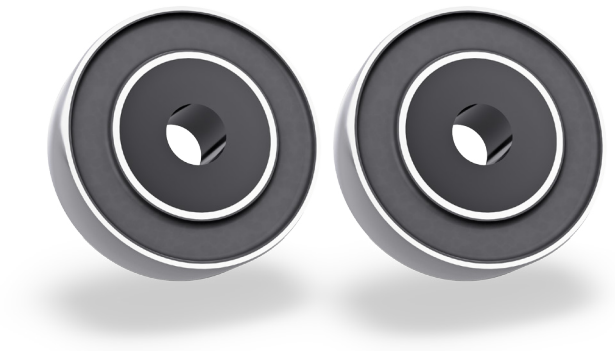

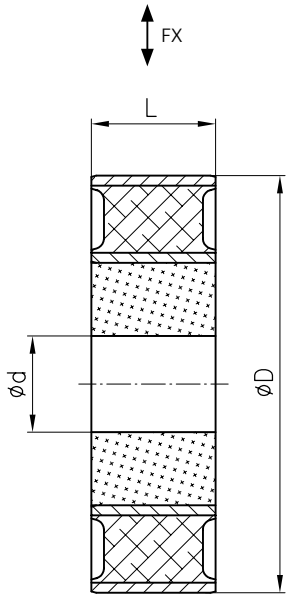

ABS-no.	GMT item number	Length L1 [mm]	Length L2 [mm]	Ø d [mm]	Ø D [mm]	Radial stiffness [N/mm]
ABS0756 A0 95M	420 09901	12.3-0.1	12.3-0.1	9.525-0.013	39.3	approx. 850

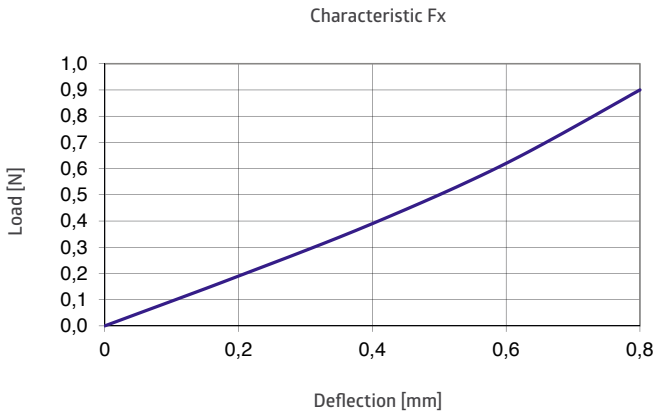

Example of use

Shockmounts are mainly used for interior and sub-structure applications (walls, galleys, lavatories, hat racks and other monuments).

SHOCK MOUNTS ACC. TO ABS0756 GMT-NO. 42011101

Traceparts

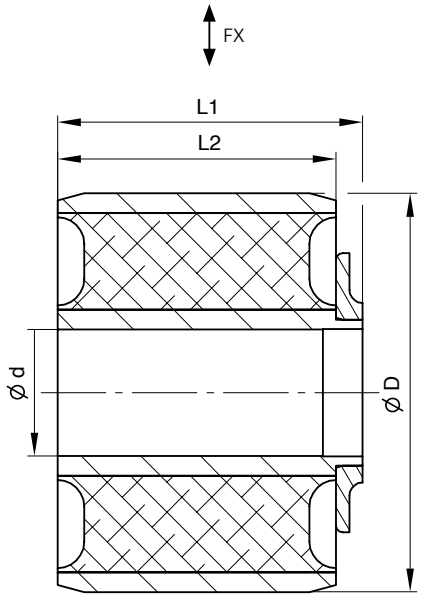

ABS-no.	GMT item number	Length L1 [mm]	Length L2 [mm]	Ø d [mm]	Ø D [mm]	Radial stiffness [N/mm]
ABS0756 A0 95M	420 11101	22.95	20.95±0.1	9.525+0.022	30 h7	approx. 1140

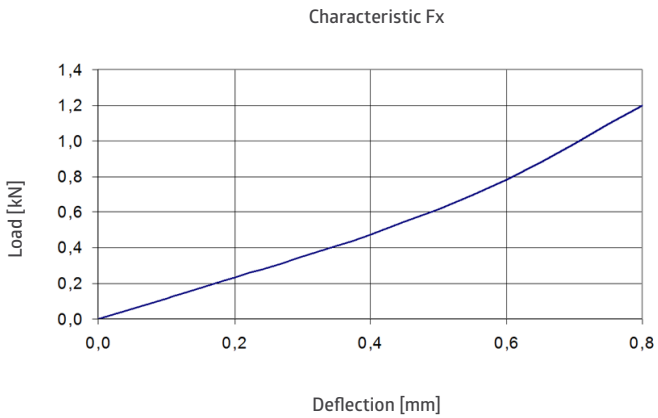

Example of use

Shockmounts are mainly used for interior and sub-structure applications (walls, galleys, lavatories, hat racks and other monuments).

SHOCK MOUNTS ACC. TO ABS0756 GMT-NO. 41031001

Traceparts

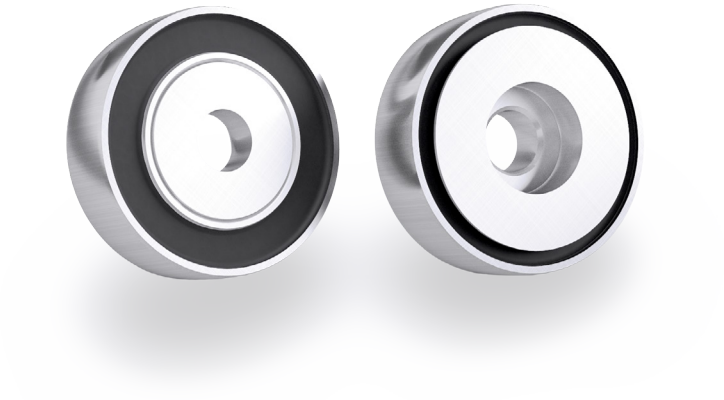

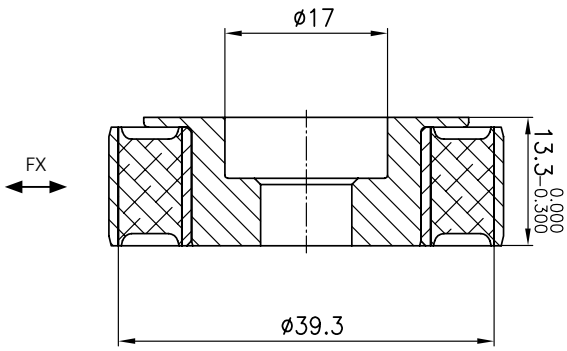

ABS-no.	GMT item number	Radial stiffness [N/mm]
ABS0756 A 095H	410 31001	approx. 850

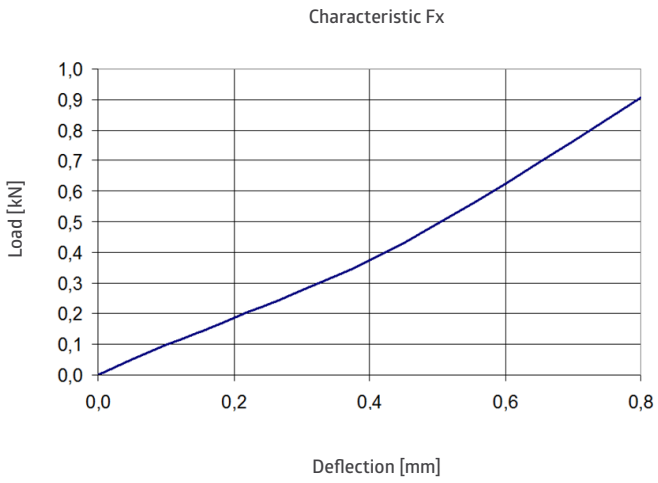

Example of use

Shockmounts are mainly used for interior and sub-structure applications (walls, galleys, lavatories, hat racks and other monuments).

SHOCK MOUNTS ACC. TO ABS0756 GMT-NO. 41031301

Traceparts

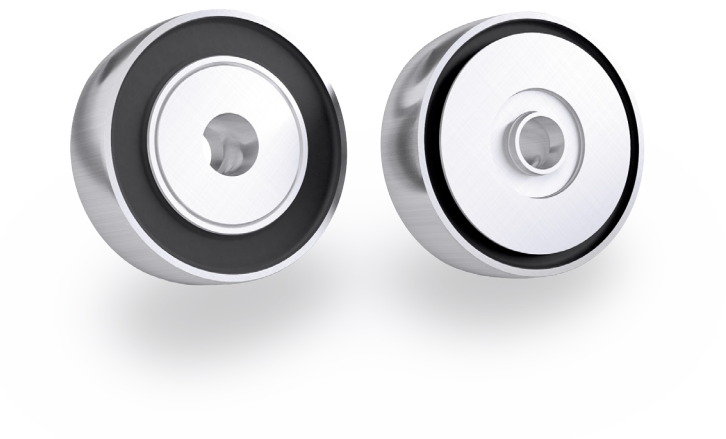

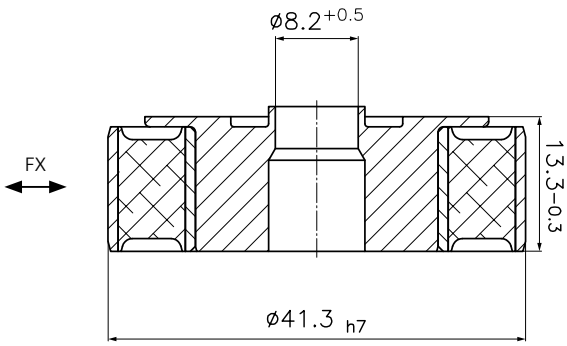

ABS-no.	GMT item number	Radial stiffness [N/mm]
ABS0756 A 082H	410 31301	approx. 850

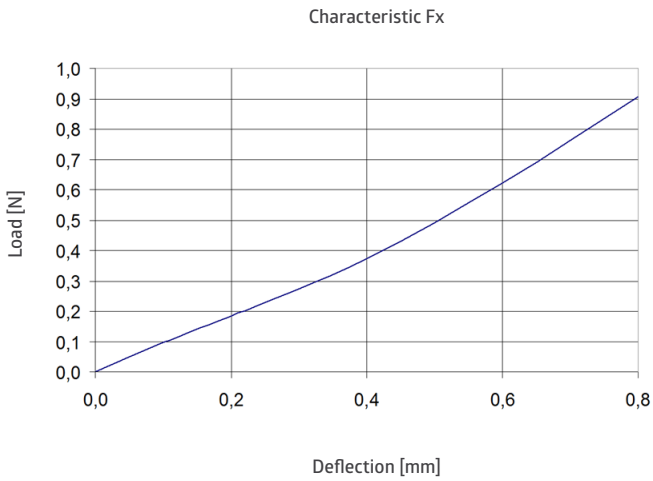

Example of use

Shockmounts are mainly used for interior and sub-structure applications (walls, galleys, lavatories, hat racks and other monuments).

SPECIAL PARTS

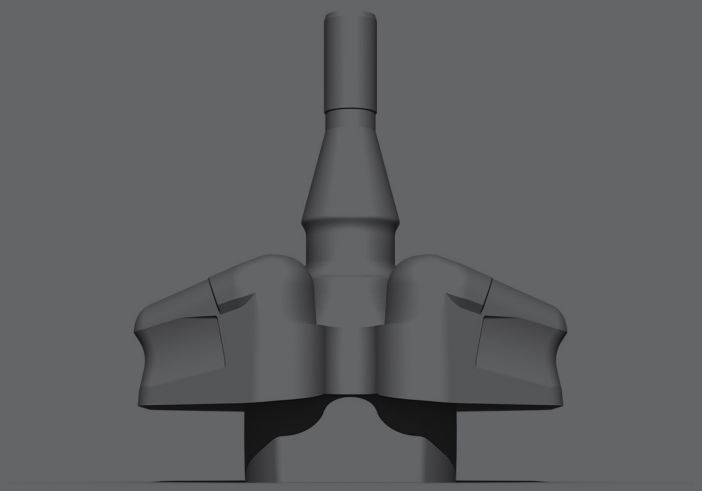

TABLE OF CONTENTS

- Isolator Mount 191
- Bushing 192 -194
- Clawstop 195
- Engine Mount 196
- Window Bracket 197
- MF Element 198
- Shock Mount (rectangular) 199
- Mounting of internal measurement unit (Eurofighter) 200

ISOLATOR MOUNT GMT-NO. 69000901

Traceparts

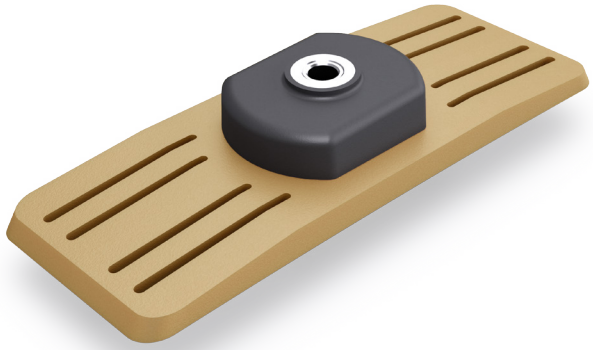

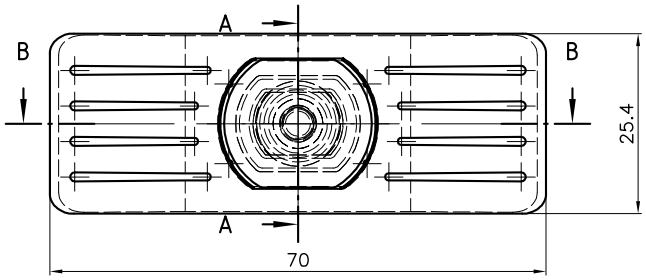

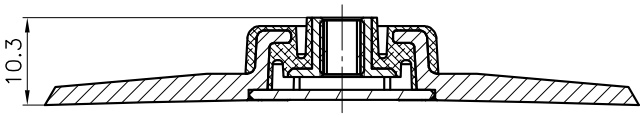

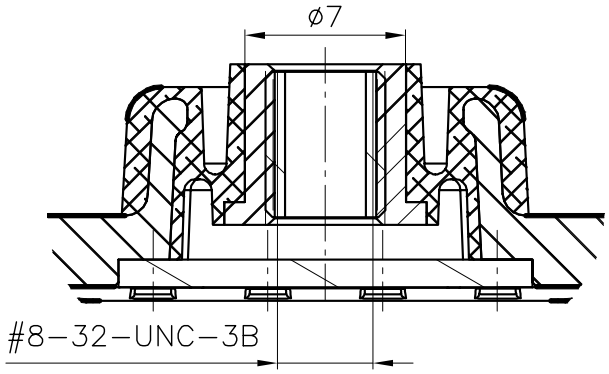

Example of use

Mountig of sidewall panels inside the cabin of the aircraft

BUSHING GMT-NO. 42009401

Traceparts

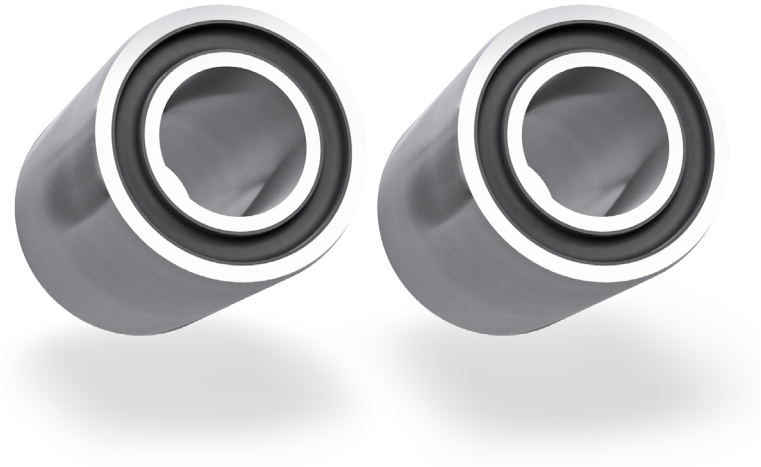

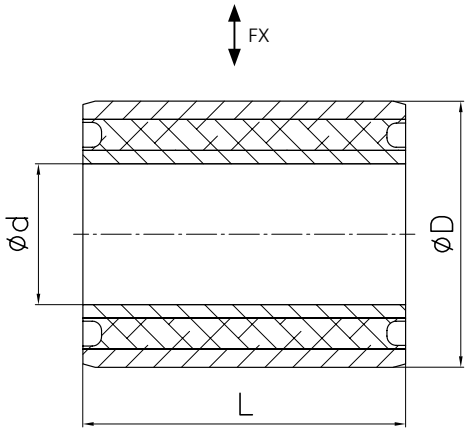

GMT item number	Length L1 [mm]	Ø d [mm]	Ø D [mm]	Radial stiffness [N/mm]
420 09401	52-0.2	22.68+0.02	42.85 +0.013/-0.012	approx. 21

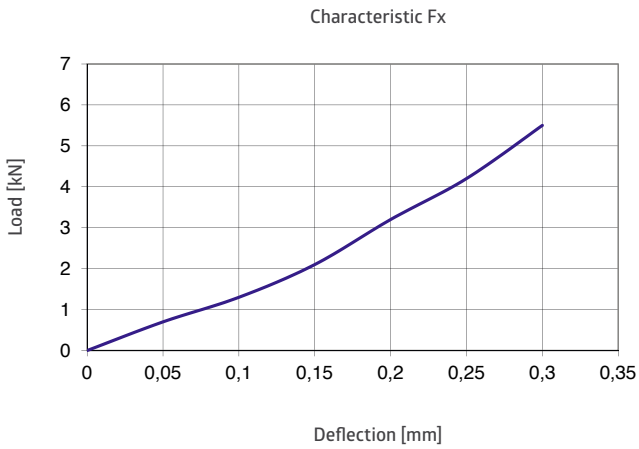

Example of use

Mounting of the trolley lift in the cabin of A380 Aircraft

BUSHING GMT-NO. 42009601

Traceparts

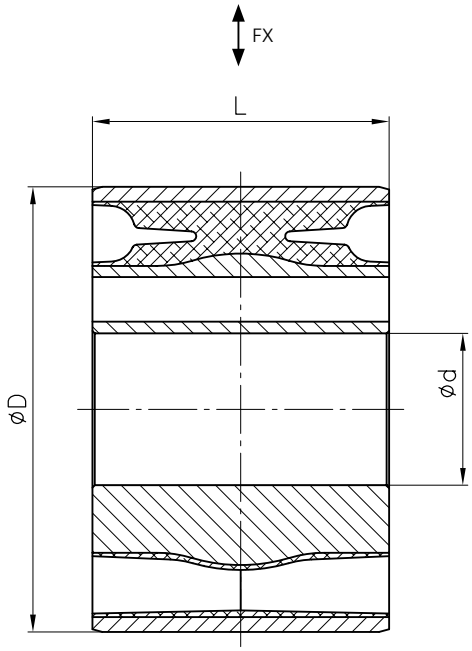

GMT item number	Length L1 [mm]	Ø d [mm]	Ø D [mm]	Radial stiffness [N/mm]
420 09601	60-0.2	30.696+0.02	90 +0.023/-0.012	x-direction approx. 5,7 y-direction approx. 1,7

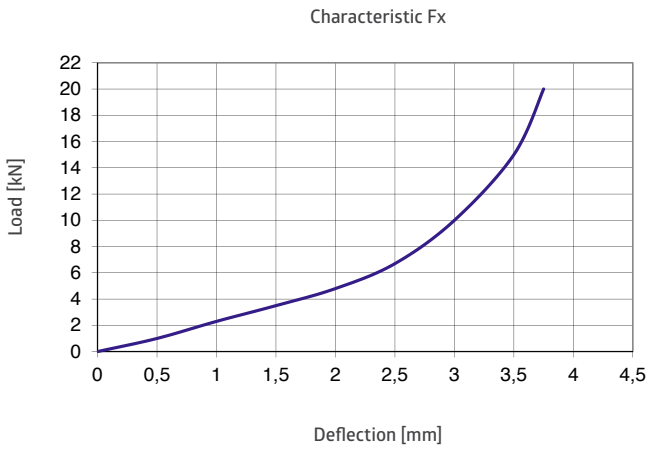

Example of use

Mounting of the trolley lift in the cabin of A380 Aircraft

BUSHING GMT-NO. 42010202

Traceparts

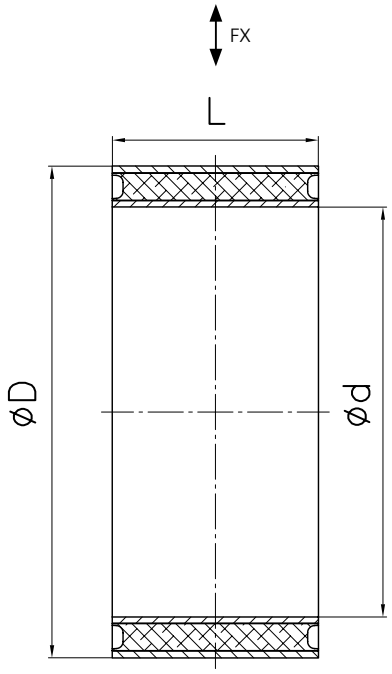

GMT item number	Length L1 [mm]	Ø d [mm]	Ø D [mm]	Radial stiffness [N/mm]
420 10202	57-0.2	113.4 +0.1/+0.02	136 -0.02/-0.1	approx. 35

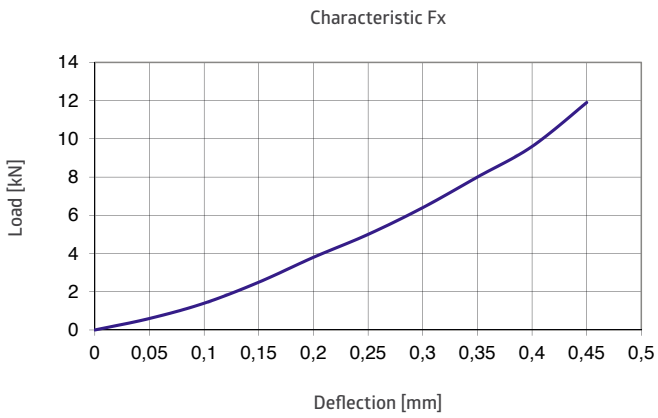

Example of use

Mounting of the trolley lift in the cabin of A380 Aircraft

SHOCKMOUNT CLAWSTOP GMT-NO. 41047401

Traceparts

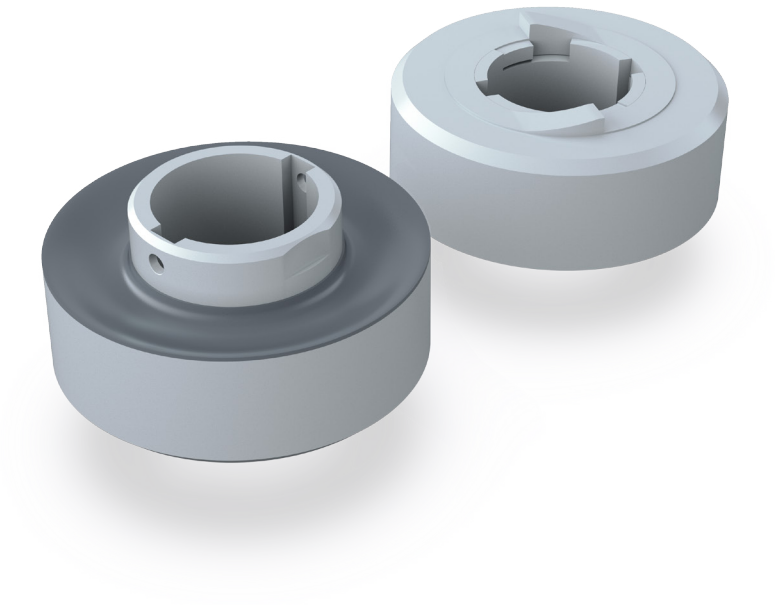

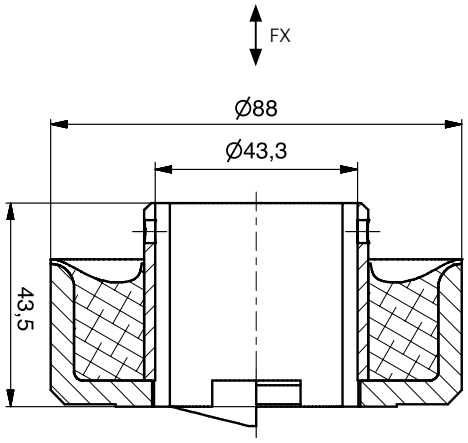

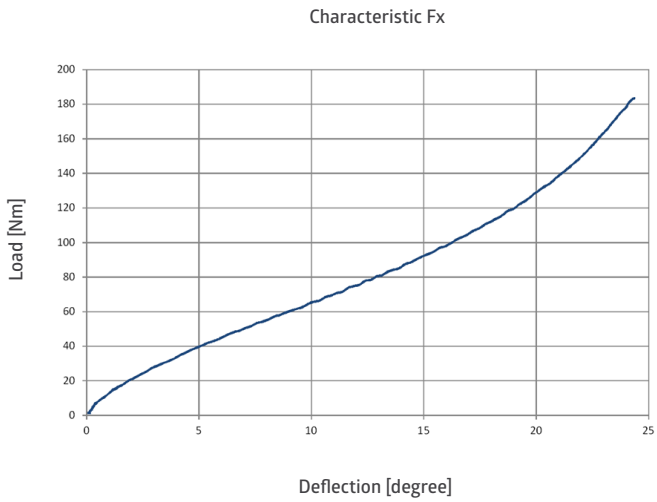

Example of use

Endstop for Trimmable Horizontal Stabilizer Actuators (THSA)

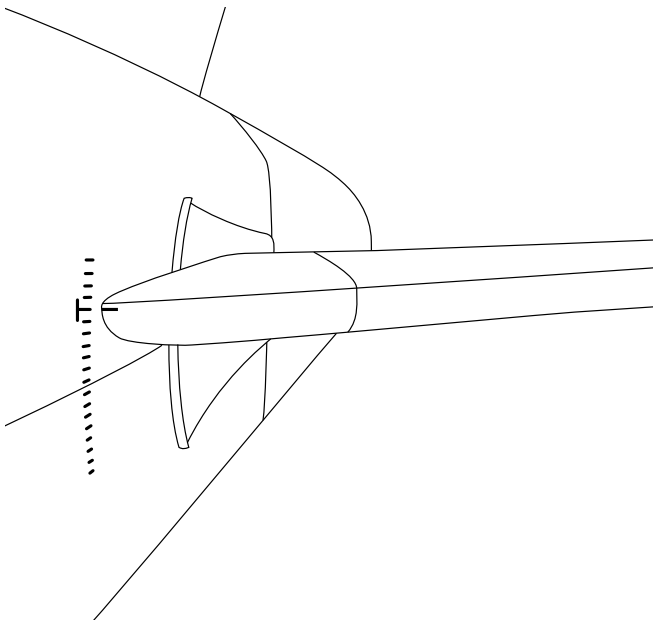

ENGINE MOUNT GMT-NO. 12003601

Traceparts

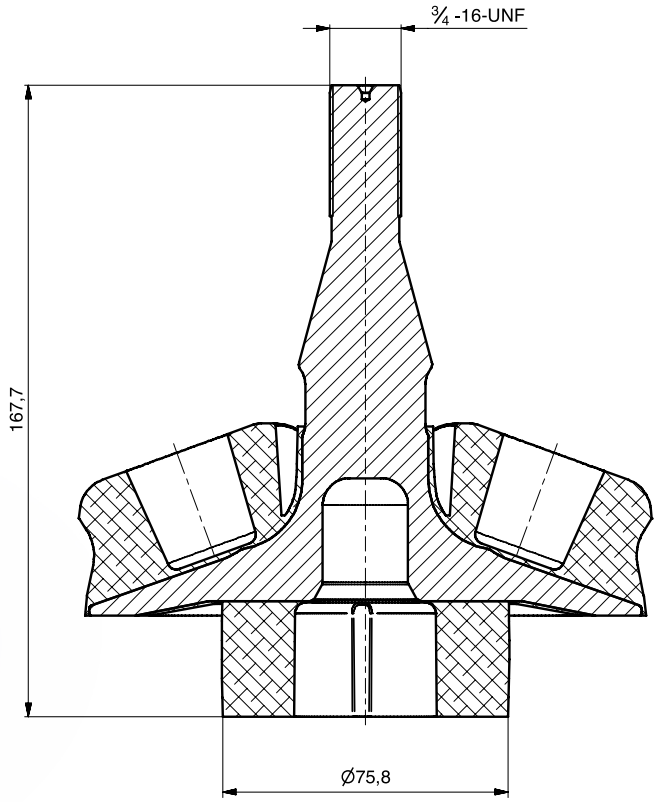

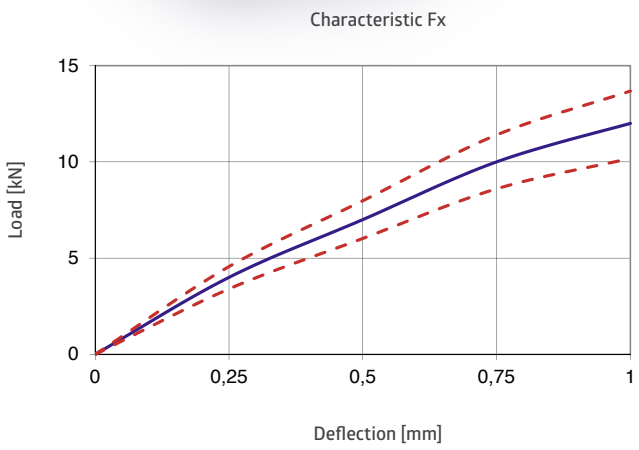

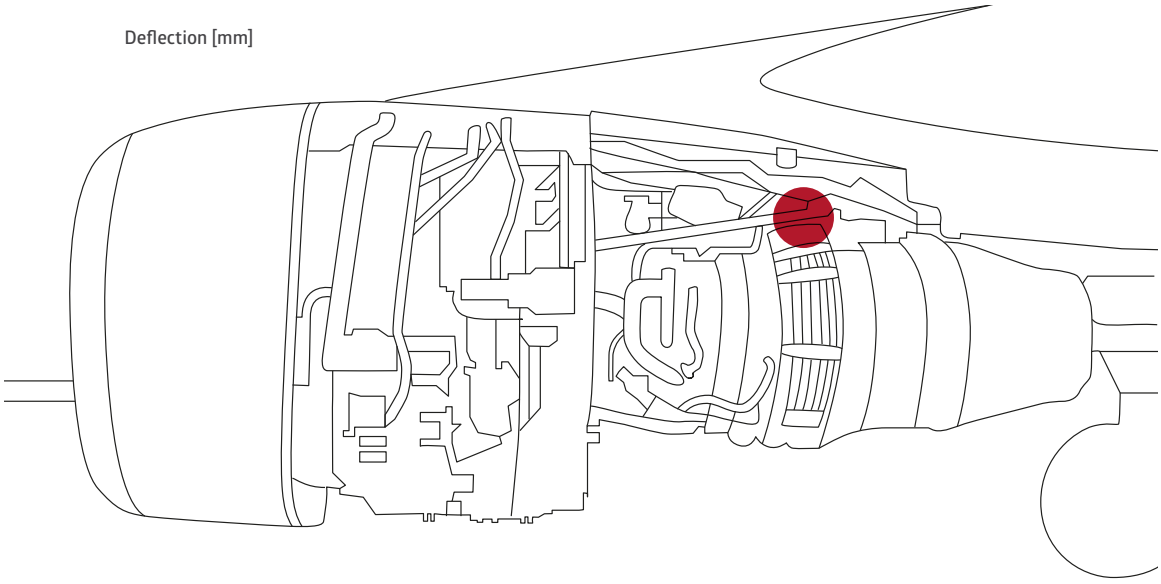

SHOCKMOUNT WINDOW BRACKET GMT-NO. 86000304

Traceparts

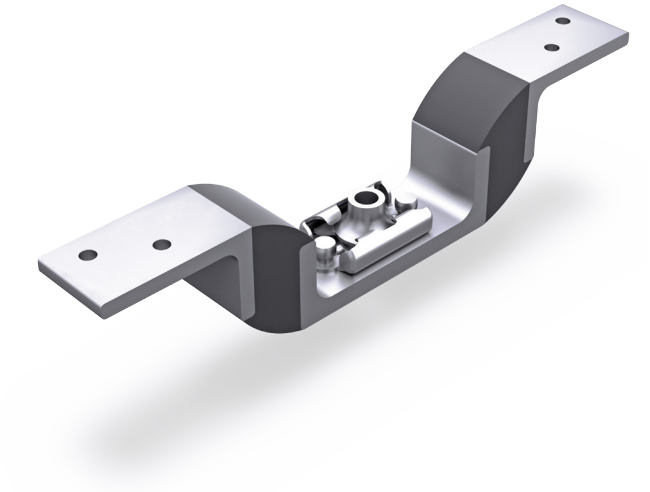

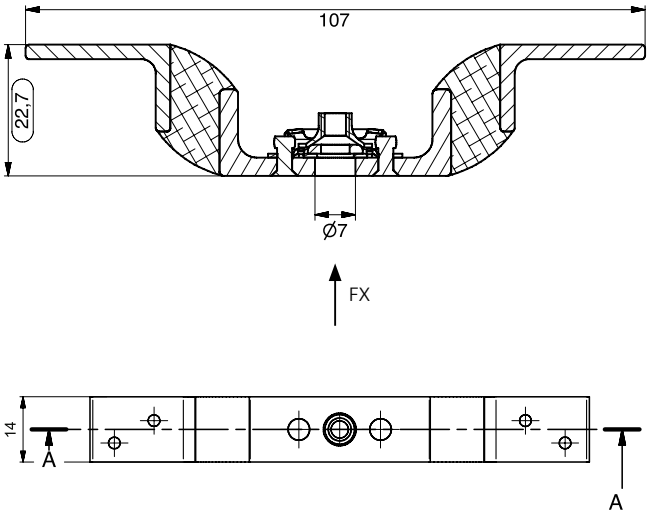

Example of use

the Window bracket is used to fix the inner window inside the cabin. It serves as an noise and temperature isolator and helps to adjust production tolerances.

MF ELEMENT GMT-NO. 15501801

Traceparts

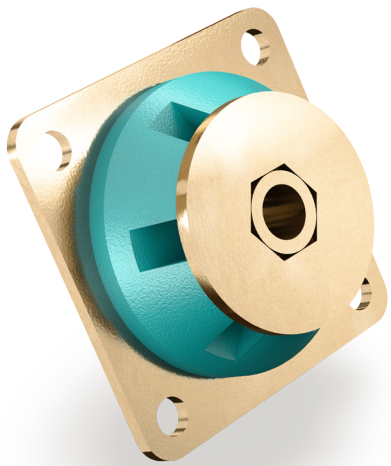

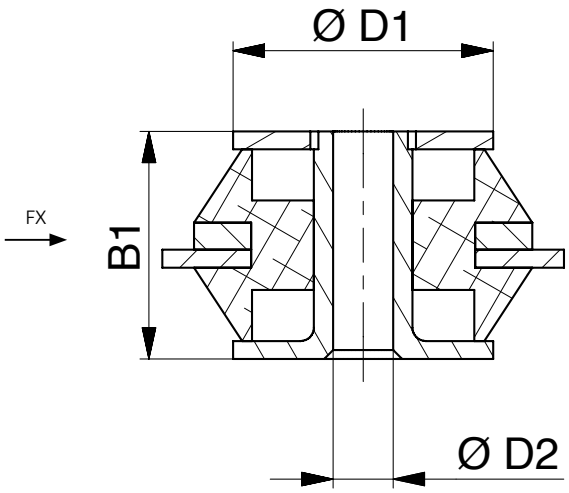

GMT item number	Ø D1 [mm]	Ø D2 [mm] [+0,2]	B1 [mm] [±0,6]
15501801	29	6,7	25,4

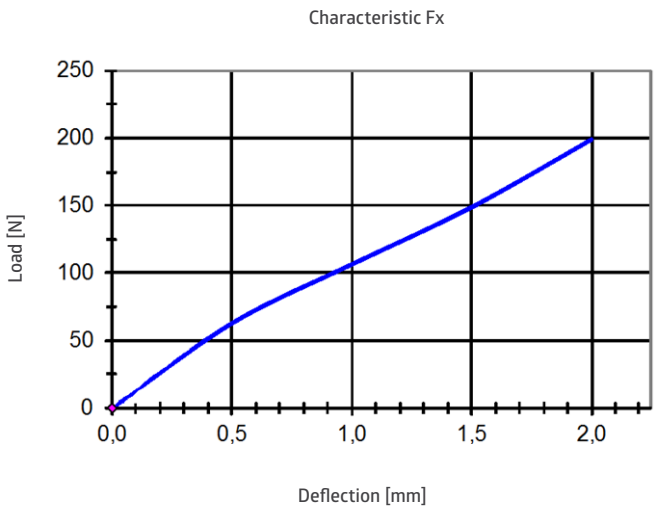

Example of use

Suspension of equipment and aggregates used for structure-borne noise insulation

- fail safe design
- age and oil-resistant elastomer (silicone or EPDM)
- working temperature –50°C to + 180°C
- application: fuel pipes, blowers, hydraulic pumps

SHOCKMOUNT (RECTANGULAR) GMT-NO. 94003001, 94003101

Traceparts

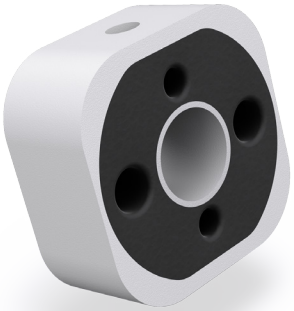

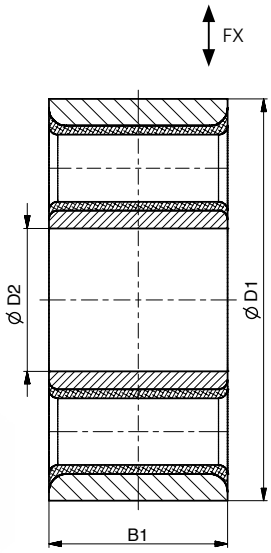

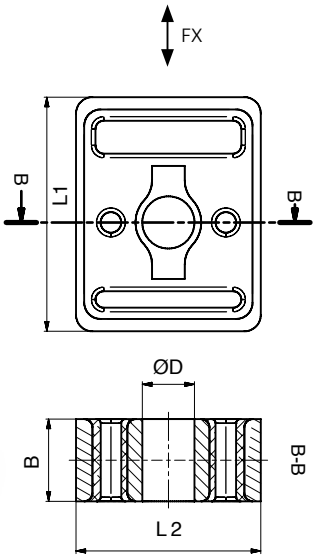

GMT item number	Ø L [mm] [±0,2]	L1 [mm] [±0,2]	L2 [mm] [±0,2]	Ø D [mm] [+0,018]	B1 [mm] [-0,2]
94003001	45			16	20
94003101		57	45	12,7	20

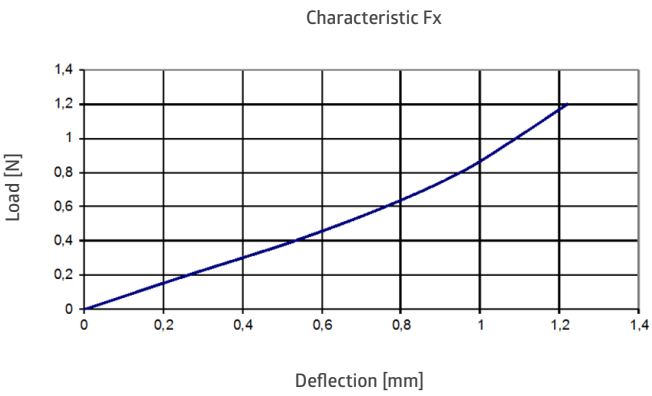

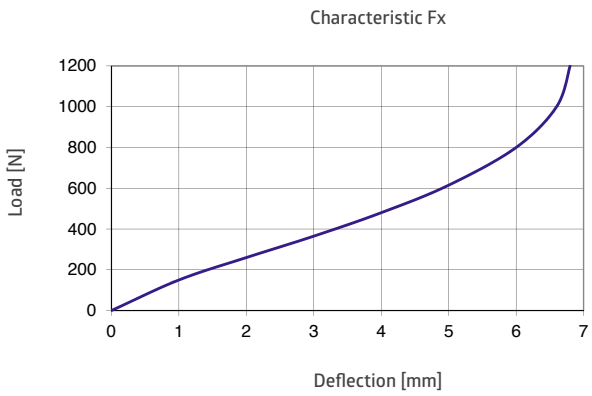

Example of use

Mounting of cockpit door (intrusion protection). Due to the special geometry and rigidity of these shock mounts we guarantee a protection against intrusion of the cockpit door. The elements absorb the attempted intrusion and thus protect the locking mechanism effectively.

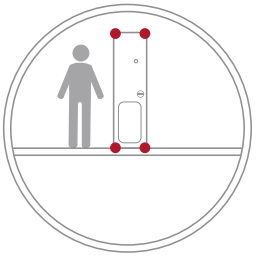

MOUNTING OF INTERNAL MEASUREMENT UNIT (EUROFIGHTER) GMT-NO. 62026201

Traceparts

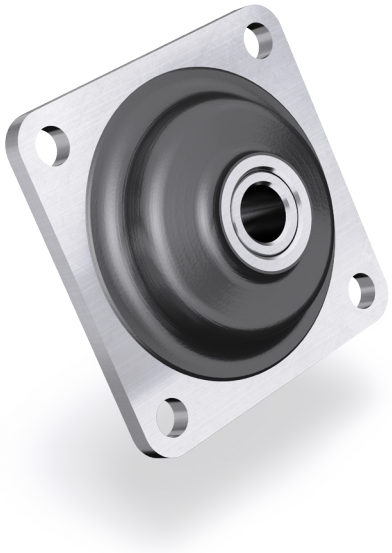

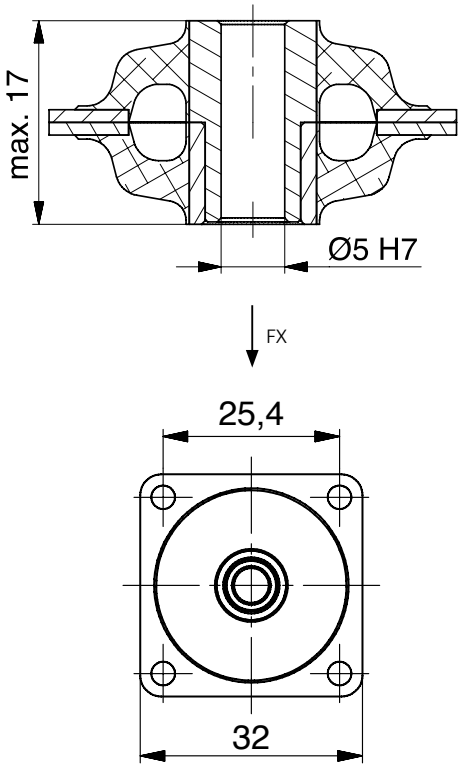

Example of use

Mounting of electrical and mechanical components With MF shock mounts, all kinds of electrical and mechanical components can be mounted inside the plane, e.g. instruments in the cockpit, the air conditioning unit, electrical components for flight control or pumps and gear drives at the jet engines.

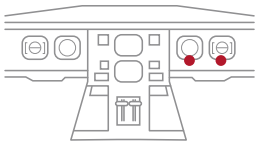

CONTACT

Gummi · Metall · Technik

Customer Support Europe:
Headquarter Germany
sales-aircraft@gmt-aerospace.com
Phone: +49 7 223 804 604
Fax: +49 7 223 804 88 604
www.gmt-aerospace.com

Customer Support USA:
sales-usa@gmt-aerospace.com
Phone: +1 301 640 6843
Cell Phone : +1 301 825 2176
www.gmt-aerospace.com

Customer Support France:
aerospace@gmt-france.fr
Phone: +33 3 82 59 33 90
Fax: +33 3 82 59 33 99

Our partner in Italy:
Pantecnica Spa
info@pantecnica.it
Phone: +39 02 93 26 10 53
Fax: +39 02 93 26 10 90
www.pantecnica.it

Developer Database:
Traceparts
www.traceparts.com

www.gmt-aerospace.com

www.gmt-aerospace.com